NCL DEC 11

PROJECT ID: 9330-00-70
WITH: N/A

COUNTY: FOREST

25

STATE PROJECT	FEDERAL PROJECT	
	PROJECT	CONTRACT
9330-00-70	WISC 2011842	1

ORDER OF SHEETS

TOTAL SHEETS = 78

STATE OF WISCONSIN
DEPARTMENT OF TRANSPORTATION

PLAN OF PROPOSED IMPROVEMENT

STH 32 - MARINETTE COUNTY LINE

3RD STREET TO MARINETTE COUNTY LINE

CTH C

FOREST COUNTY

STATE PROJECT NUMBER
9330-00-70

AS-BUILT PLAN
SUPERVISOR: MIKE NOVEY, DAAR
PROJECT LEADER: JASON T. HRIBAR, MSA
CONTRACTOR: PITLIK AND WICK
DATE STARTED: JUNE 11, 2012
DATE COMPLETED: AUGUST 8, 2012

PROJECT LOCATION

BEGIN PROJECT
STA. 14+00
Y=522365.396
X=904880.660

END PROJECT
STA. 601+54
Y=514942.509
X=958082.151

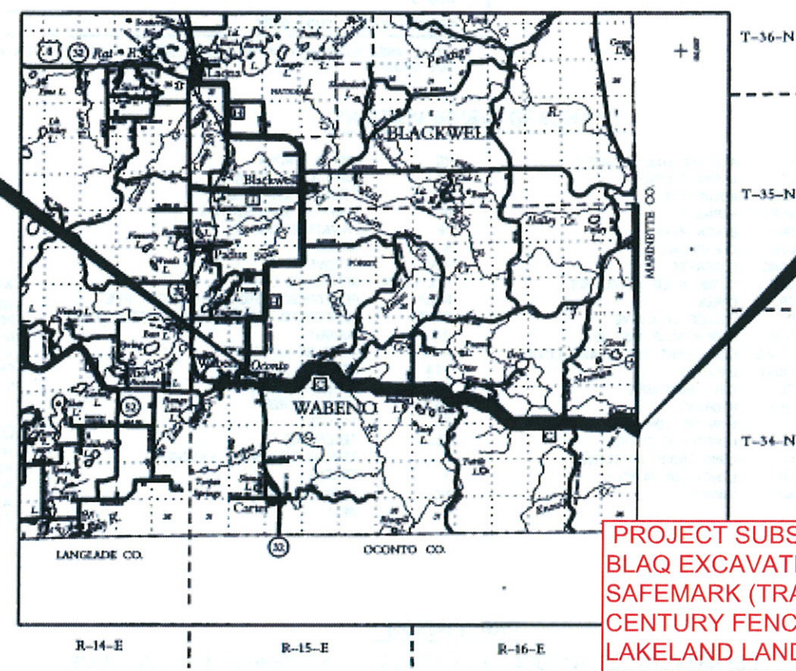

DESIGN DESIGNATION

A.A.D.T. (2012)	=	390
A.A.D.T. (2032)	=	480
D.H.V. (2032)	=	68
D.D.	=	63/37
T.	=	4.9%
DESIGN SPEED	=	45 MPH
ESALS	=	65,700

CONVENTIONAL SYMBOLS

PLAN
CORPORATE LIMITS
PROPERTY LINE
LOT LINE
LIMITED HIGHWAY EASEMENT
EXISTING RIGHT OF WAY
PROPOSED OR NEW R/W LINE
SLOPE INTERCEPT
REFERENCE LINE
EXISTING CULVERT
PROPOSED CULVERT (Box or Pipe)
COMBUSTIBLE FLUIDS
MARSH AREA
WOODED OR SHRUB AREA

PROFILE
GRADE LINE
ORIGINAL GROUND
MARSH OR ROCK PROFILE (To be noted as such)
SPECIAL DITCH
GRADE ELEVATION
CULVERT (Profile View)

UTILITIES
ELECTRIC
FIBER OPTIC
GAS
SANITARY SEWER
STORM SEWER
TELEPHONE
WATER
UTILITY PEDESTAL
POWER POLE
TELEPHONE POLE

LAYOUT
SCALE 0 2 MI.

TOTAL NET LENGTH OF CENTERLINE = 11.128 MI. (RURAL)

HORIZONTAL COORDINATES ORIGINATED FROM THE WISCONSIN CONTINUALLY OPERATING REFERENCE SYSTEM (WISCORS) AND ARE REFERENCED TO THE WISCONSIN COUNTY COORDINATE SYSTEM (WCCS), FOREST COUNTY ZONE, NAD 83 (2007) DATUM AND ARE GRID VALUES.

PROJECT SUBS:
BLAQ EXCAVATING (GRADING, CULVERTS)
SAFEMARK (TRAFFIC CONTROL)
CENTURY FENCE (PVMT. MARKINGS)
LAKELAND LANDSCAPERS (LANDSCAPING, SIGNS)
CENTRAL STAKING (STAKING)

PROJECT STAFF (MSA):
CHAD SCHROEDER, PROJECT ENGINEER
BILL TERESENSKI, PHIL KRIESEL, INSPECTORS
JEFF DEMUTH, SURVEYORS

APPROVED FOR FOREST COUNTY
7-21-11 DATE
COUNTY HIGHWAY COMMISSIONER

ORIGINAL PLANS PREPARED BY
AYRES ASSOCIATES

WISCONSIN PHILLIP J. VERVILLE III E-36,036 GREEN BAY PROFESSIONAL ENGINEER

DATE: 7/21/11

STATE OF WISCONSIN
DEPARTMENT OF TRANSPORTATION

PREPARED BY

Surveyor	AYRES ASSOCIATES
Designer	AYRES ASSOCIATES
Management Consultant	CEDAR CORPORATION
C.O. Examiner	Cyle Haag

APPROVED FOR THE DEPARTMENT
DATE: 8-1-11
Management Consultant Signature

E

2

GENERAL NOTES

DISTURBED AREAS WITHIN THE RIGHT OF WAY, EXCEPT THE AREAS WITHIN THE FINISHED SHOULDER POINTS, WILL BE FERTILIZED, SEEDED AND EROSION MAT OR MULCH.

THE LOCATION OF EXISTING UTILITIES AS SHOWN ON THE PLANS ARE APPROXIMATE. THERE MAY BE UTILITY INSTALLATIONS WITHIN THE PROJECT AREA THAT ARE NOT SHOWN.

EROSION CONTROL MEASURES WILL BE PLACED AS SHOWN ON THE CONSTRUCTION DETAILS. THE EXACT LOCATIONS WILL BE DETERMINED IN THE FIELD BY THE ENGINEER.

MEETING EXISTING PAVEMENT WITH NEW PAVEMENT WILL BE PREFORMED WITH A BUTT JOINT. ALL BUTT JOINTS ARE TO BE SAW CUT.

SAW CUT LOCATIONS SHOWN ON THE PLAN ARE SUBJECTED TO ADJUSTMENT BY THE ENGINEER IN FIELD. THE LINE OF SUCH SAW CUTS WILL BE NEATLY DELINEATED THRU THE ASPHALT WITHOUT ANY DAMAGE TO THE REMAINING PORTION OF THE EXISTING PAVEMENT.

NO TREES OR SHRUBS ARE TO BE REMOVED WITHOUT THE APPROVAL OF THE ENGINEER.

CURVE DATA IS BASED ON ARC DEFINITION.

3 1/2-INCH HMA PAVEMENT WILL BE CONSTRUCTED WITH THE TWO LAYERS CONSISTING OF ONE 1 3/4-INCH LOWER LAYER AND ONE 1 3/4-INCH UPPER LAYER. USE ASPHALT MATERIAL PG 58-28 FOR THE LOWER LAYER AND PG 58-34 FOR THE UPPER LAYER.

4-INCH HMA PAVEMENT WILL BE CONSTRUCTED WITH THE TWO LAYERS CONSISTING OF ONE 2 1/4-INCH LOWER LAYER AND ONE 1 3/4-INCH UPPER LAYER. USE ASPHALT MATERIAL PG 58-28 FOR THE LOWER LAYER AND PG 58-34 FOR THE UPPER LAYER.

ACCESS TO ALL RESIDENCES AND BUSINESSES WILL BE MAINTAINED DURING CONSTRUCTION.

EXACT LOCATION OF ENTRANCES WILL BE DETERMINED BY THE ENGINEER IN THE FIELD.

WHEN THE QUANTITY OF THE ITEM OF BASE AGGREGATE DENSE IS MEASURED FOR PAYMENT BY THE TON, THE DEPTH OR THICKNESS OF THE LAYER SHOWN ON THE PLANS IS APPROXIMATE AND THE ACTUAL THICKNESS WILL DEPEND ON THE DISTRIBUTION OF THE MATERIAL AS DIRECTED BY THE ENGINEER.

FILL EXPANSION FACTOR IS 30%.

EXCAVATION BELOW SUBGRADE (EBS) WILL BE MEASURED AND PAID FOR AS EXCAVATION COMMON. THE LOCATION FOR EBS WILL BE DETERMINED BY THE ENGINEER IN THE FIELD.

INLET AND DISCHARGE ELEVATIONS FOR DRAINAGE PIPES SHOWN ON THE PLAN SHEETS ARE APPROXIMATE AND WILL BE DETERMINED BY THE ENGINEER IN THE FIELD.

PRIOR TO ORDERING DRAINAGE PIPES, THE CONTRACTOR WILL VERIFY RELATED DRAINAGE INFORMATION IN THE PLAN WITH THE ENGINEER IN THE FIELD.

ALL ELEVATIONS ON THIS PROJECT ARE REFERENCED TO THE NORTH AMERICAN VERTICAL DATUM OF NAVD 88 AND ORIGINATED FROM NGS MONUMENT T222.

ALL NEW CULVERT PIPES WILL REQUIRE ENDWALLS.

REFERENCE LINE REFERS TO ALIGNMENT AND STATIONING. CENTERLINE REFERES TO EXISTING ROADWAY CENTERLINE. REFERENCE LINE AND CENTERLINE ARE NOT COINCIDENTAL.

THE CONTRACTOR IS RESPONSIBLE FOR PROTECTING MOTORISTS AND PEDESTRIANS THAT MAY ENTER THE WORK ZONE FROM POSSIBLE HAZARDS.

DESIGN CONTACT

AYRES ASSOCIATES TELEPHONE 920-498-1200
3376 PACKERLAND DRIVE
DE PERE, WISCONSIN 54115-9586
ATTENTION: PHIL VERVILLE
E-MAIL: VERVILLEP@AYRESASSOCIATES.COM

FOREST COUNTY HIGHWAY DEPARTMENT

COUNTY HIGHWAY COMMISSIONER TELEPHONE 715-478-3516
5350 COUNTY ROAD W
CRANDON, WISCONSIN 54520
ATTENTION: JOHN ROGERS
E-MAIL: JOROGERS@CO.FOREST.WI.US

RUNOFF COEFFICIENT TABLE

	HYDROLOGIC SOIL GROUP											
	A			B			C			D		
	SLOPE RANGE (PERCENT)			SLOPE RANGE (PERCENT)			SLOPE RANGE (PERCENT)			SLOPE RANGE (PERCENT)		
LAND USE:	0-2	2-6	6 & OVER	0-2	2-6	6 & OVER	0-2	2-6	6 & OVER	0-2	2-6	6 & OVER
ROW CROPS	.08 .22	.16 .30	.22 .38	.12 .26	.20 .34	.27 .44	.15 .30	.24 .37	.33 .50	.19 .34	.28 .41	.38 .56
MEDIAN STRIP-TURF	.19 .24	.20 .26	.24 .30	.19 .25	.22 .28	.26 .33	.20 .26	.23 .30	.30 .37	.20 .27	.25 .32	.30 .40
SIDE SLOPE-TURF			.25 .32			.27 .34			.28 .36			.30 .38
PAVEMENT:												
ASPHALT	.70 - .95											
CONCRETE	.80 - .95											
BRICK	.70 - .80											
DRIVES, WALKS	.75 - .85											
ROOFS	.75 - .95											
GRAVEL ROADS, SHOULDERS	.40 - .60											

TOTAL AREA EXPECTED TO BE DISTURBED BY CONSTRUCTION ACTIVITIES = 36.50 ACRES
SOIL GROUP B

STANDARD ABBREVIATIONS

ADT	AVERAGE DAILY TRAFFIC	NC	NORMAL CROWN
AC	ASPHALT CEMENT	PT	POINT OF TANGENCY
AGG	AGGREGATE	PC	POINT OF CURVATURE
ASPH	ASPHALT	PI	POINT OF INTERSECTION
BM	BENCH MARK	PE	PRIVATE ENTRANCE
C/L	CENTERLINE	R	RADIUS
CONC	CONCRETE	REM	REMOVE
CMP	CORRUGATED METAL PIPE	R/L OR RL	REFERENCE LINE
CR.	CREEK	RCCP	REINFORCED CONCRETE CULVERT PIPE
D	DEGREE OF CURVE	RCPSS	REINFORCED CONCRETE PIPE STORM SEWER
DHV	DESIGN HOUR VOLUME	R.O.	RUNOUT
ESALS	EQUIVALENT SINGLE AXIS LOADS	R/W	RIGHT-OF-WAY
EXIST	EXISTING	STA	STATION
FE	FIELD ENTRANCE	SE	SUPER ELEVATION
HYD	HYDRANT	SS	STORM SEWER
IP	IRON PIPE OR PIN	T	TANGENT
L	LENGTH OF CURVE	TEL	TELEPHONE
LC	LONG CHORD OF CURVE	TLE	TEMPORARY LIMITED EASEMENT
LR	LENGTH OF RUNOFF	T	TRUCKS
MH	MANHOLE	VC	VERTICAL CURVE
		W	WELL

DNR LIAISON

DEPARTMENT OF NATURAL RESOURCES TELEPHONE 1-715-365-8916
107 SUTLIFF
RHINELANDER, WISCONSIN 54501
ATTENTION: MR. JON SIMONSEN
E-MAIL: JONATHAN.SIMONSEN@WISCONSIN.GOV

UTILITIES

WISCONSIN PUBLIC SERVICE CORPORATION TELEPHONE 920-433-1703
700 NORTH ADAMS STREET
PO BOX 19001
GREEN BAY, WI 54307
ATTENTION: LORI BUTRY
FAX: 920-433-1360
E-MAIL: LBUTRY@WPSR.COM

CENTURYLINK TELEPHONE 715-856-9138
HIGHWAY 180
PO BOX 260
WAUSAUKEE, WISCONSIN 54177
ATTENTION: MR. RICK KLUSSENDORF
E-MAIL: RICK.KLUSSENDORF@CENTURYLINK.COM

DIGGERS HOTLINE

Call 811 3 Work Days Before You Dig
or Toll Free (800) 242-8511
Hearing Impaired TDD (800) 542-2289
www.DiggersHotline.com

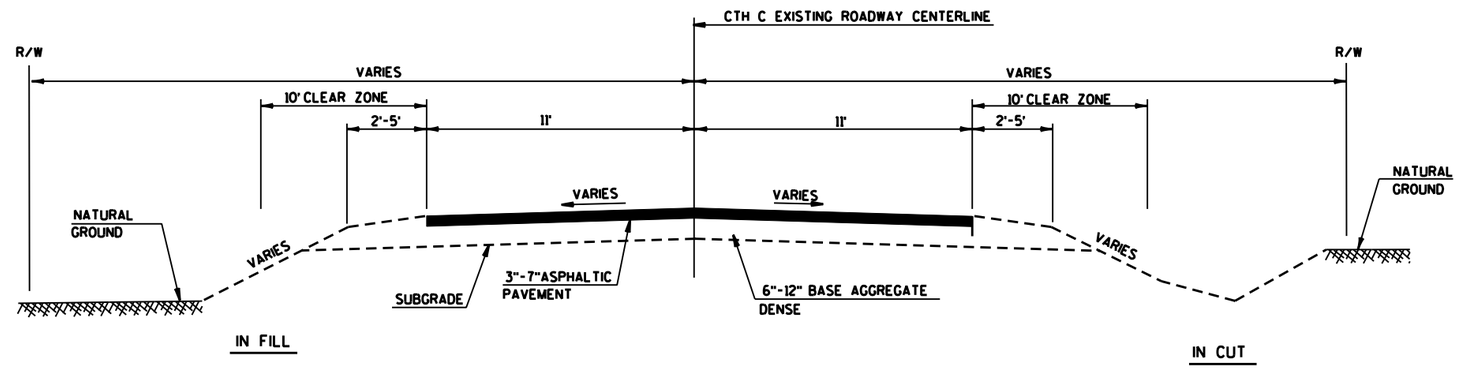

TYPICAL EXISTING SECTION FOR CTH C

STA. 14+00 - STA. 248+50

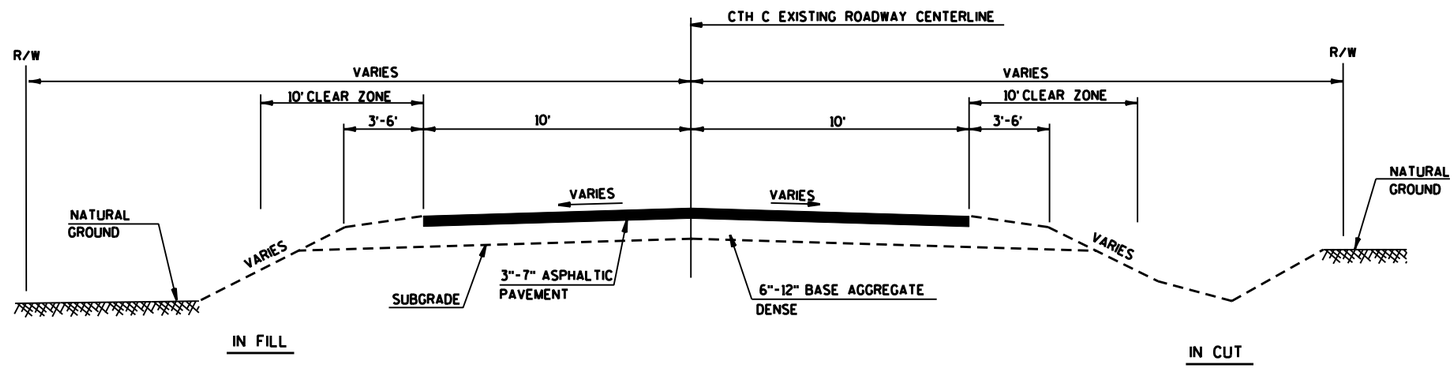

TYPICAL EXISTING SECTION FOR CTH C

STA. 248+50 - STA. 601+54

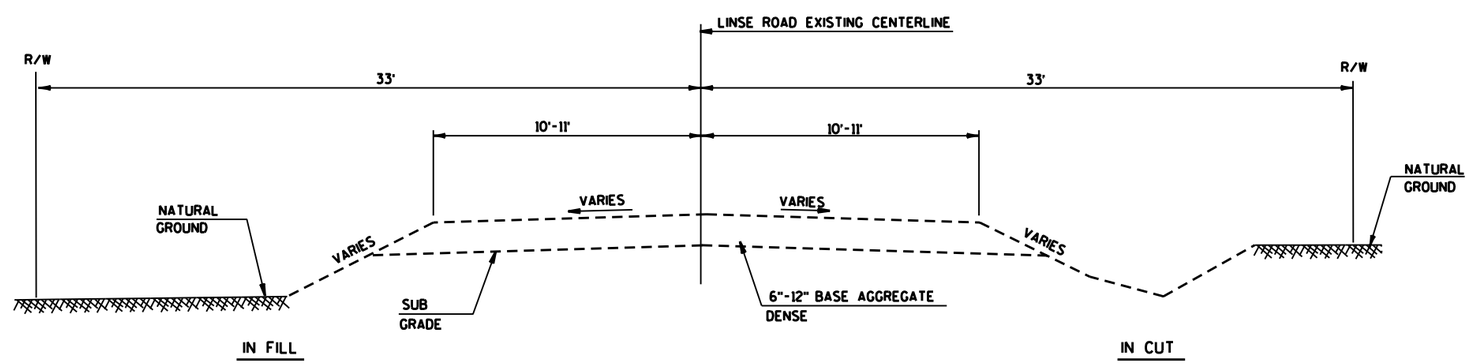

TYPICAL EXISTING SECTION FOR LINSE ROAD

PROJECT NO:9330-00-70	HWY:CTH C	COUNTY:FOREST	TYPICAL SECTIONS	SHEET 3	E

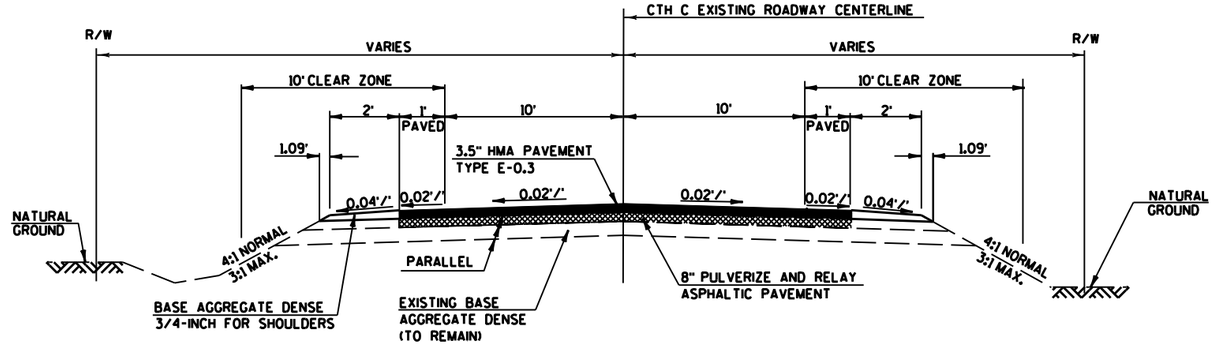

TYPICAL FINISHED SECTION FOR CTH C

STA. 14+00 - STA. 244+50

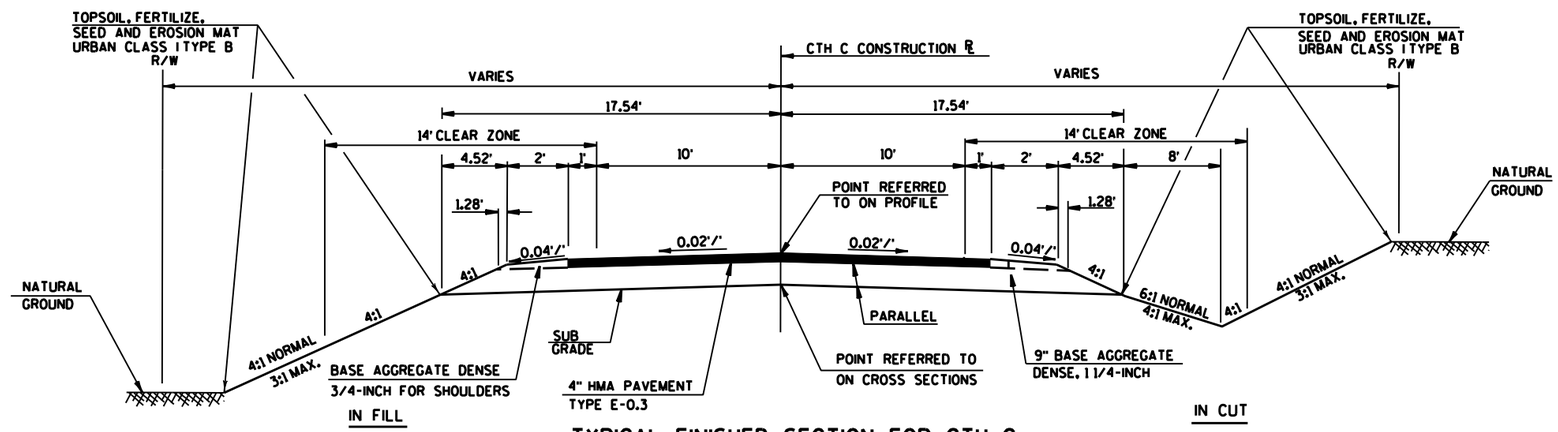

TYPICAL FINISHED SECTION FOR CTH C

STA. 244+50 - STA. 251+50

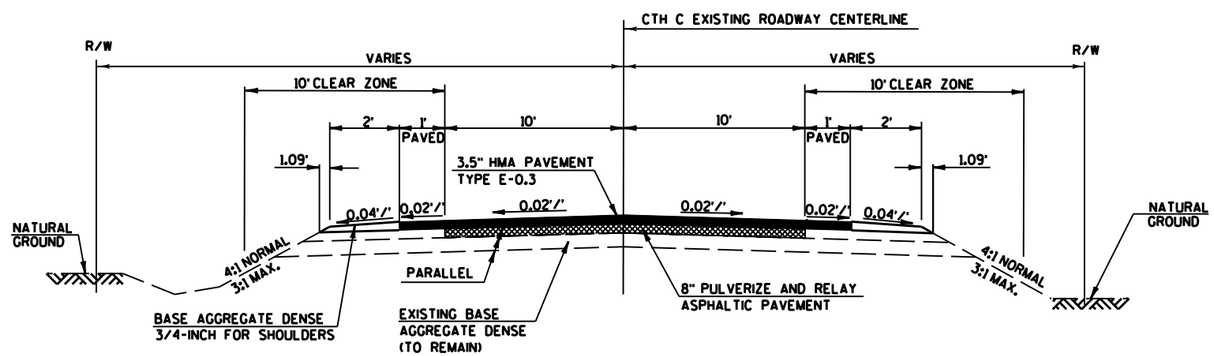

TYPICAL FINISHED SECTION FOR CTH C

STA. 251+50 - STA. 601+54

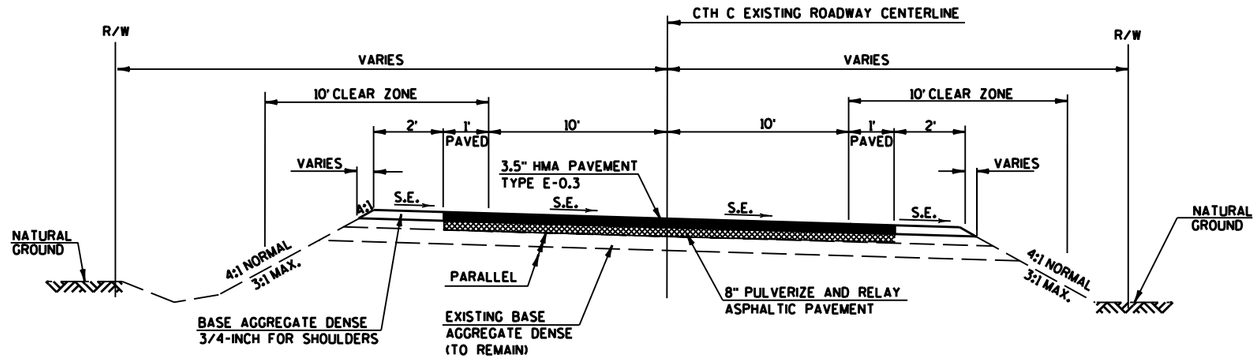

TYPICAL SUPERELEVATED FINISHED SECTION FOR CTH C

SEE PLAN SHEETS FOR LOCATIONS AND MAXIMUM SUPER ELEVATION

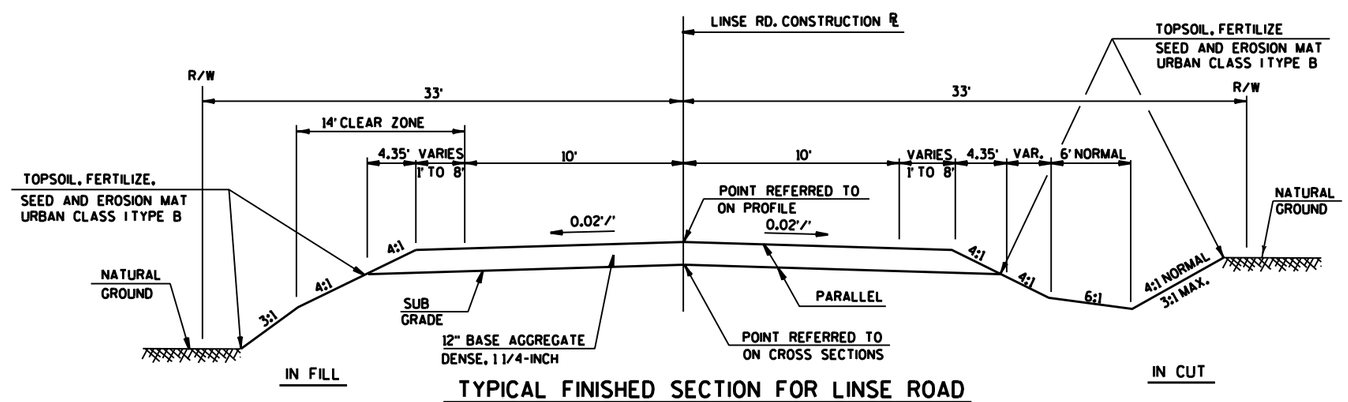

TYPICAL FINISHED SECTION FOR LINSE ROAD

STA. 300+00 - STA. 302+00

PROJECT NO: 9330-00-70	HWY: CTH C	COUNTY: FOREST	TYPICAL SECTIONS	SHEET 5	E

2

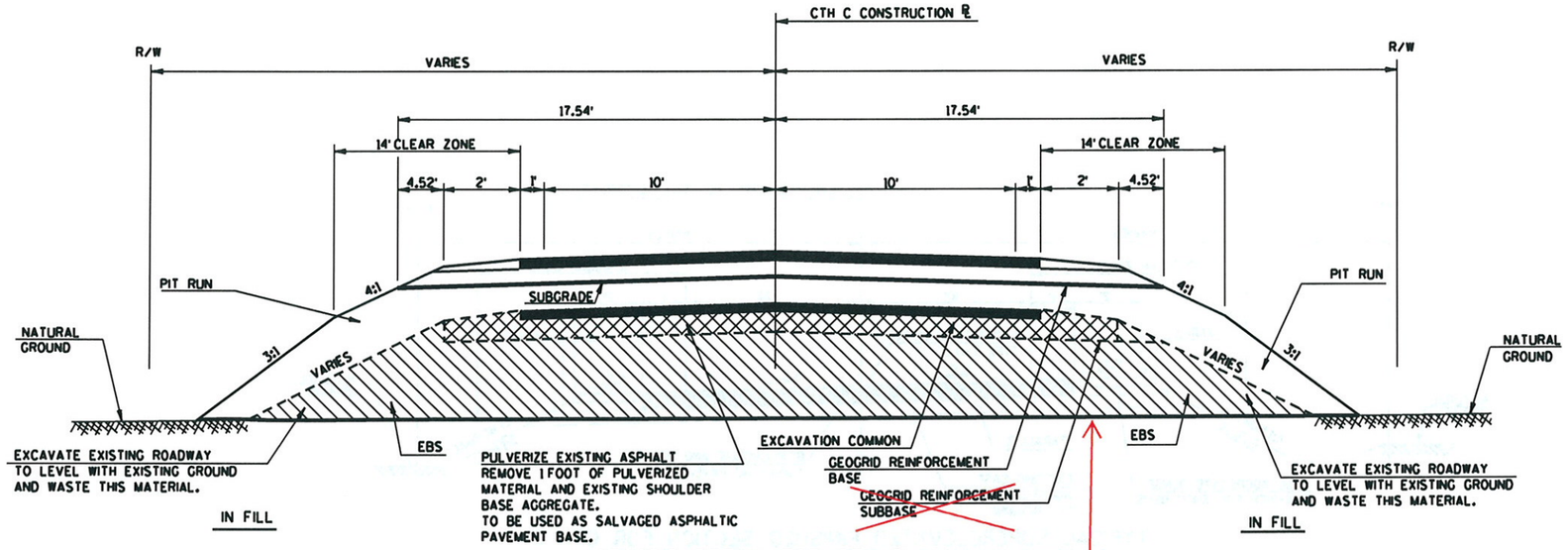

GEOGRID DETAIL FOR CTH C

STA. 244+50 - STA. 250+75

Geogrid Subbase placed here.

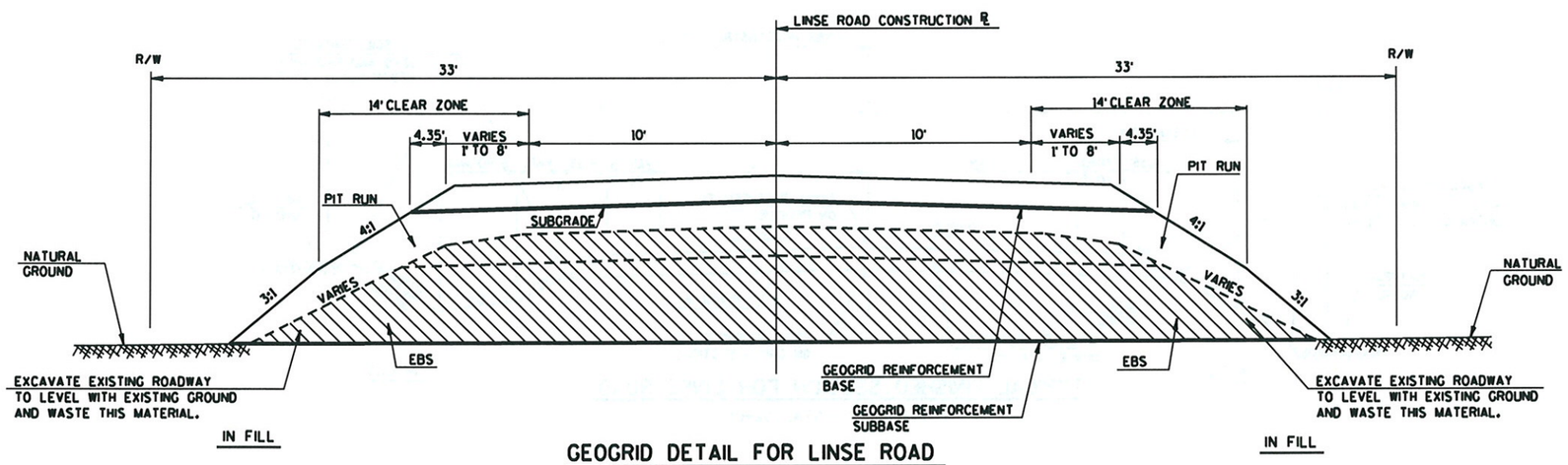

GEOGRID DETAIL FOR LINSE ROAD

STA. 300+00 - STA. 301+00

2

PROJECT NO: 9330-00-70	HWY: CTH C	COUNTY: FOREST	TYPICAL SECTIONS	SHEET 6	E

2

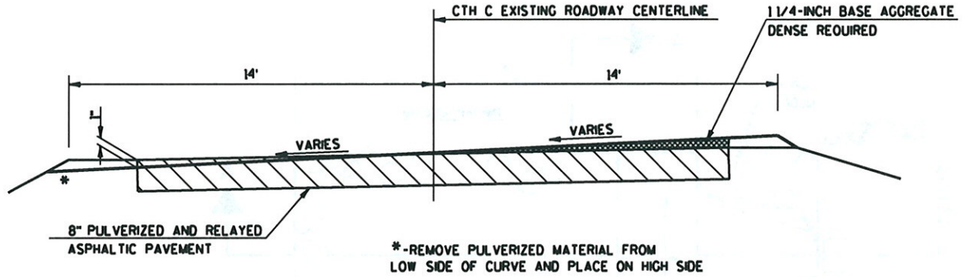

1 1/4-INCH BASE AGGREGATE DENSE WEDGING DETAIL FOR SUPERELEVATION

CURVE NO. 3
CURVE NO. 8
CURVE NO. 12
CURVE NO. 20
CURVE NO. 21
CURVE NO. 25
CURVE NO. 28

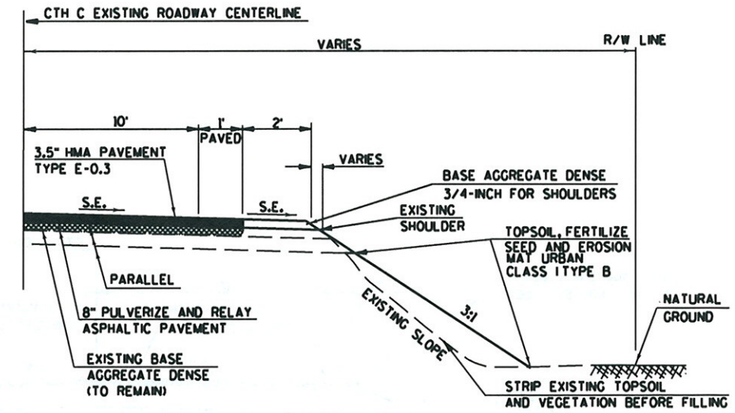

SLOPE FILLING DETAIL FOR CTH C

STA. 84+00 - STA. 87+50
STA. 114+50 - STA. 120+00

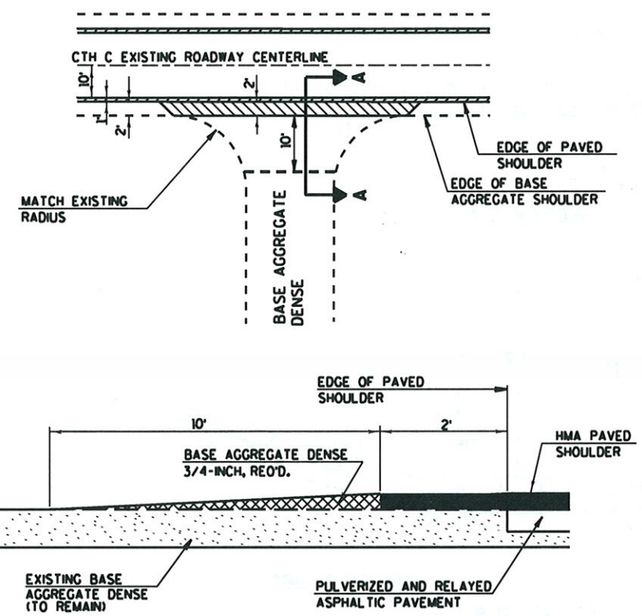

SIDE ROADS AND FOREST SERVICE ROADS BASE AGGREGATE DENSE DETAIL

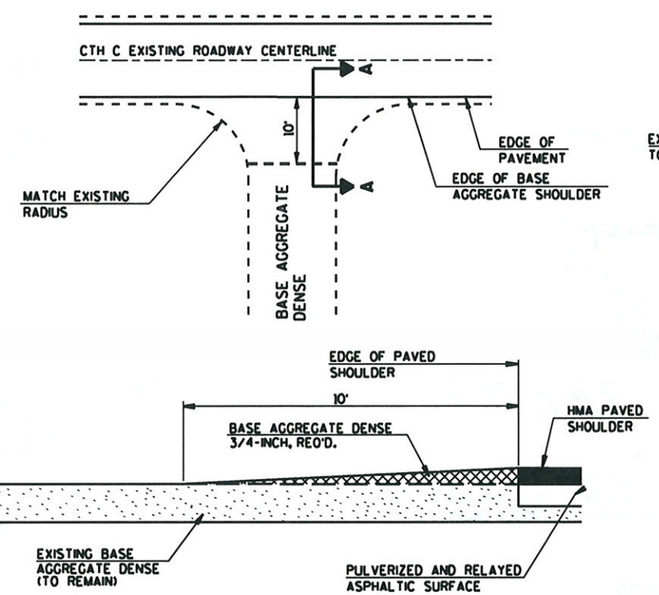

PRIVATE ENTRANCE AND FIELD ENTRANCE BASE AGGREGATE DENSE DETAIL

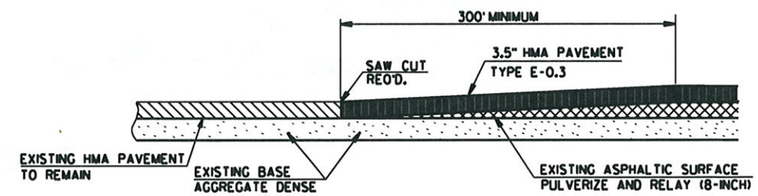

JOINT DETAIL FOR PULVERIZE AND RELAY AREAS

STA. 14+00
STA. 601+54

COST OF REMOVAL OF EXCESS MATERIAL IN TAPER AREAS SHALL BE INCIDENTAL TO PULVERIZE AND RELAY

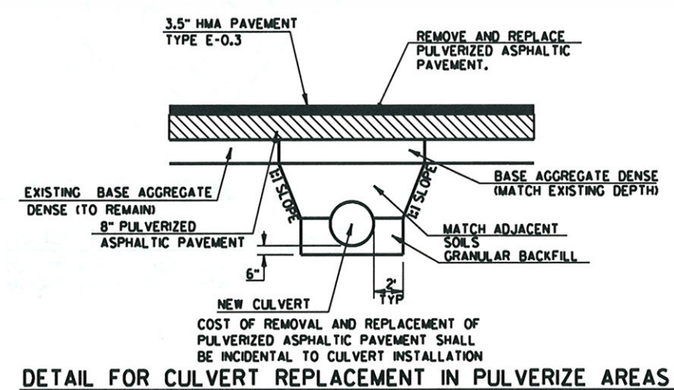

COST OF REMOVAL AND REPLACEMENT OF PULVERIZED ASPHALTIC PAVEMENT SHALL BE INCIDENTAL TO CULVERT INSTALLATION

DETAIL FOR CULVERT REPLACEMENT IN PULVERIZE AREAS

Granular backfill placed 1 foot above top of pipe.

2

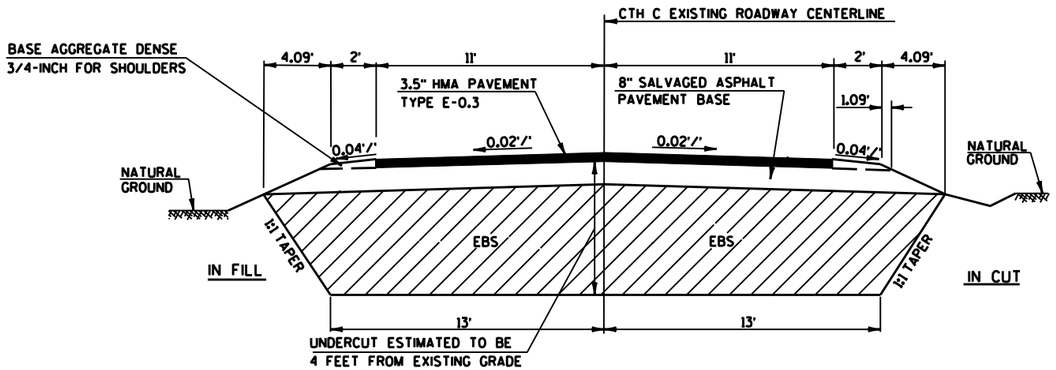

CROSS SECTION
(EXCAVATION BELOW SUBGRADE AREAS)

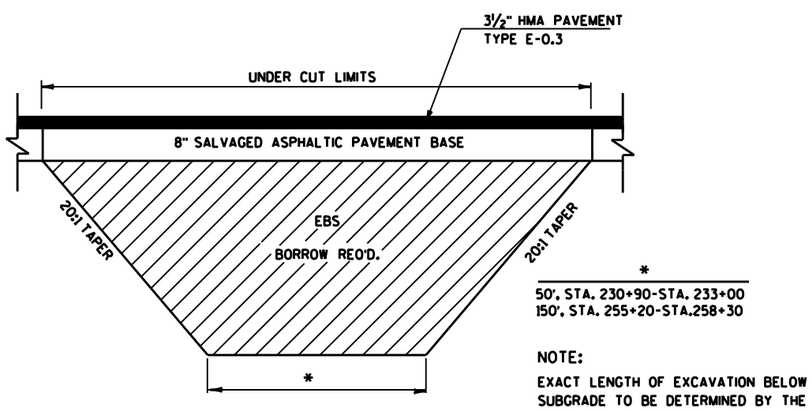

LONGITUDINAL SECTION

DETAIL FOR EXCAVATION BELOW SUBGRADE

STA. 230+90 - STA. 233+00
STA. 255+20 - STA. 258+30

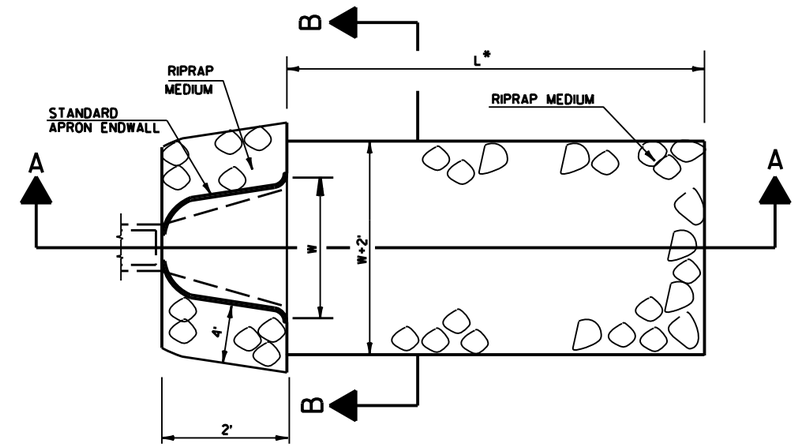

*L = 3 TIMES DIAMETER (NORMAL) OR
10' MIN. OR AS DIRECTED BY THE
ENGINEER

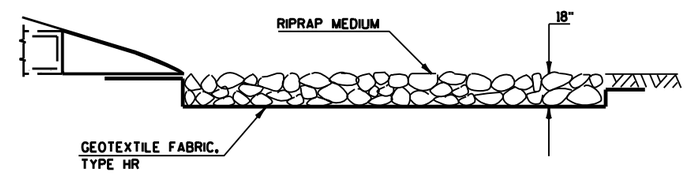

SECTION A-A

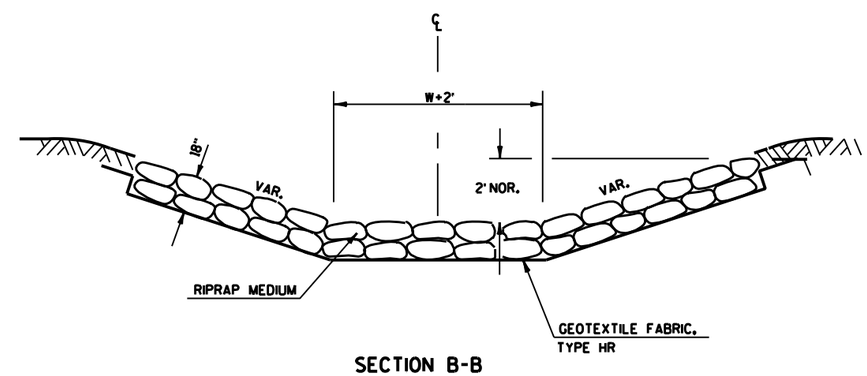

SECTION B-B

RIPRAP MEDIUM AND GEOTEXTILE FABRIC
DETAIL AT APRON ENDWALLS

2

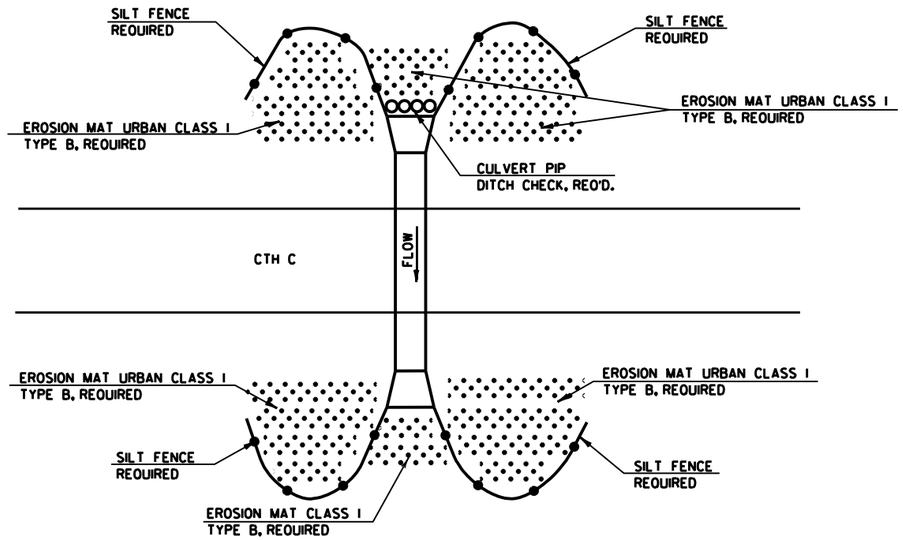

EROSION CONTROL DETAIL FOR CROSS PIPES IN RESURFACE AREA

STA. 17+61
STA. 44+90
STA. 73+99
STA. 96+15 LT.
STA. 98+96
STA. 148+13
STA. 305+44
STA. 341+68
STA. 363+50
STA. 428+00
STA. 452+70
STA. 492+78
STA. 506+47
STA. 521+57
STA. 531+17
STA. 544+36
STA. 558+27

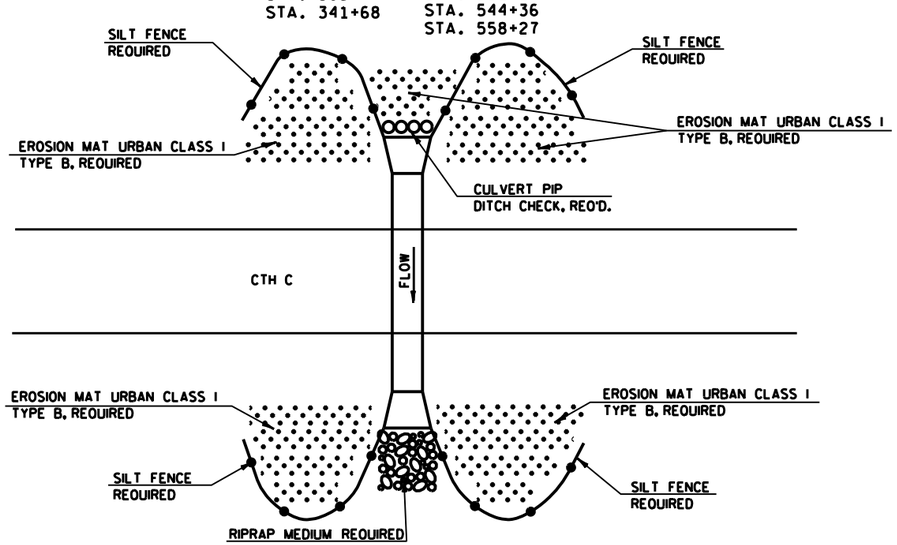

EROSION CONTROL DETAIL FOR CROSS PIPES IN RESURFACE AREA

STA. 113+12
STA. 122+92
STA. 173+87
STA. 224+92
STA. 254+63

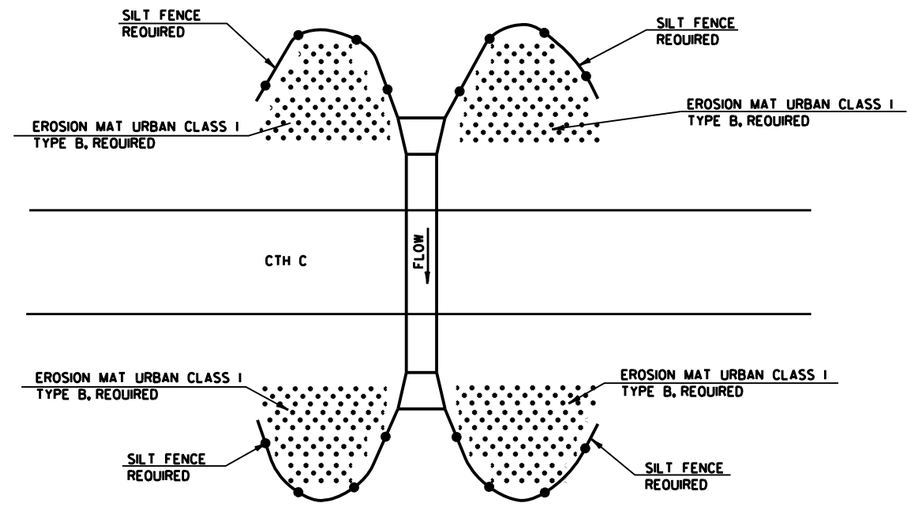

EROSION CONTROL DETAIL FOR CROSS PIPES IN RESURFACE AREA

STA. 88+78

2

PROJECT NO:9330-00-70	HWY:CTH C	COUNTY:FOREST	TYPICAL SECTIONS	SHEET 9	E

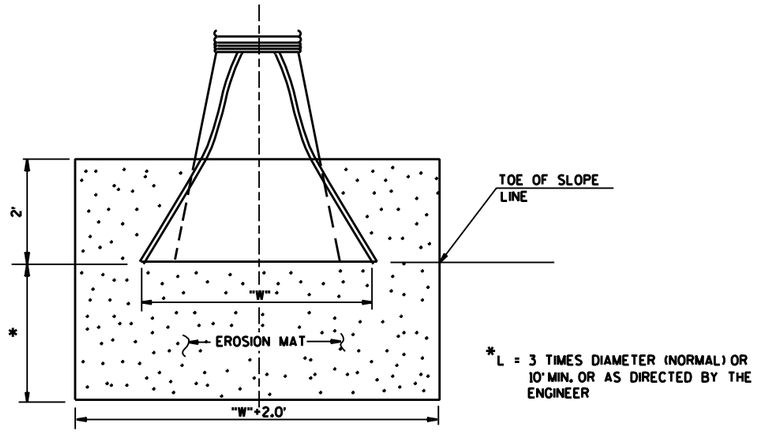

EROSION MAT AT END OF PIPE

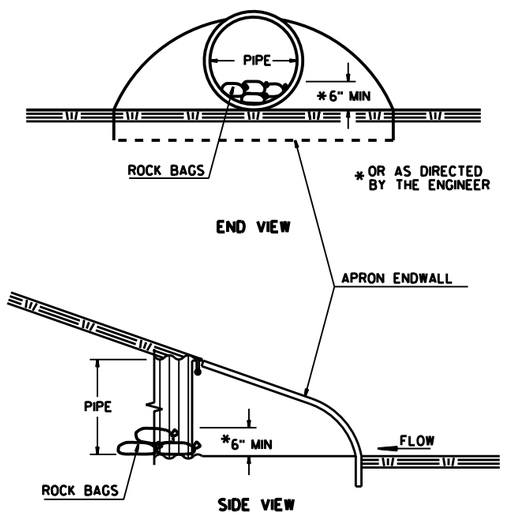

CULVERT PIPE CHECKS

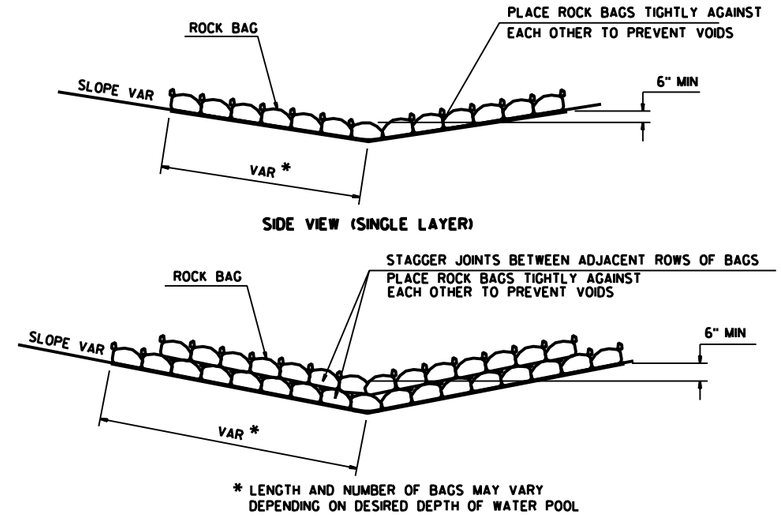

ROCK BAGS DITCH CHECK

PAID AS ROCK BAGS

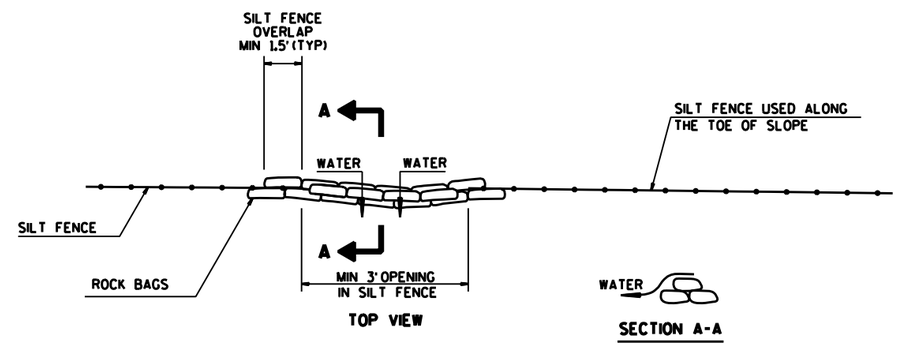

ROCK BAGS USED FOR SILT FENCE RELIEF DETAIL

PAID AS ROCK BAGS

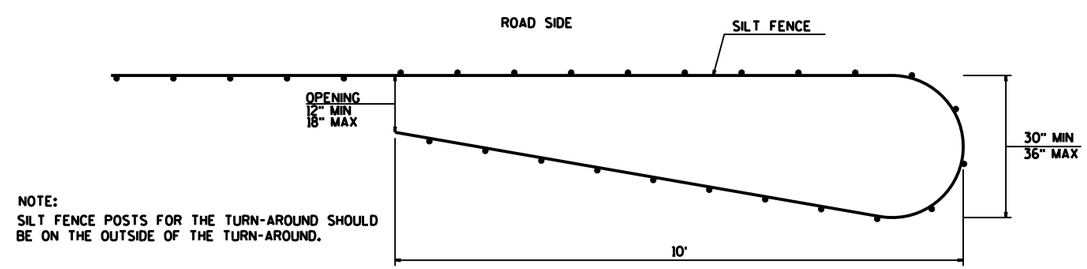

NOTE:
SILT FENCE POSTS FOR THE TURN-AROUND SHOULD BE ON THE OUTSIDE OF THE TURN-AROUND.

PLAN VIEW

SILT FENCE TURN-AROUND DETAIL

(TO BE PLACED AT ALL ENDS OF SILT FENCE)

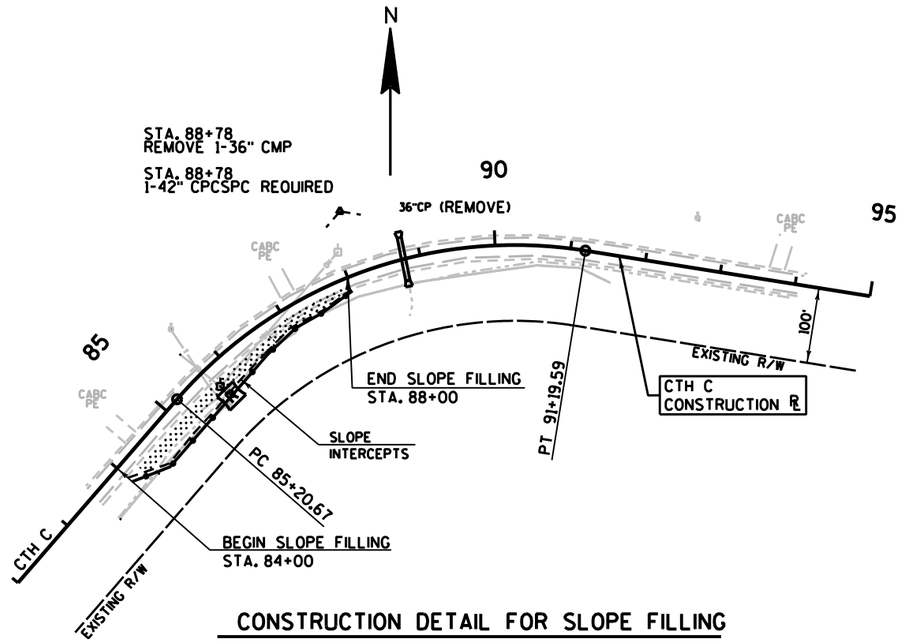

CONSTRUCTION DETAIL FOR SLOPE FILLING

STA. 84+00 - STA. 88+00

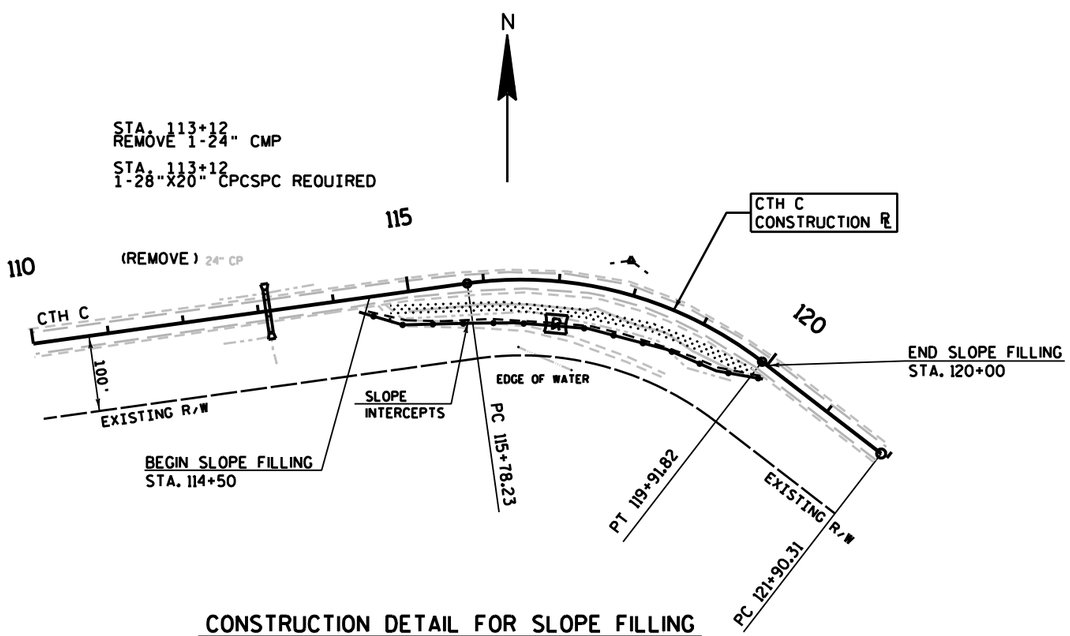

CONSTRUCTION DETAIL FOR SLOPE FILLING

STA. 114+00 - STA. 120+00

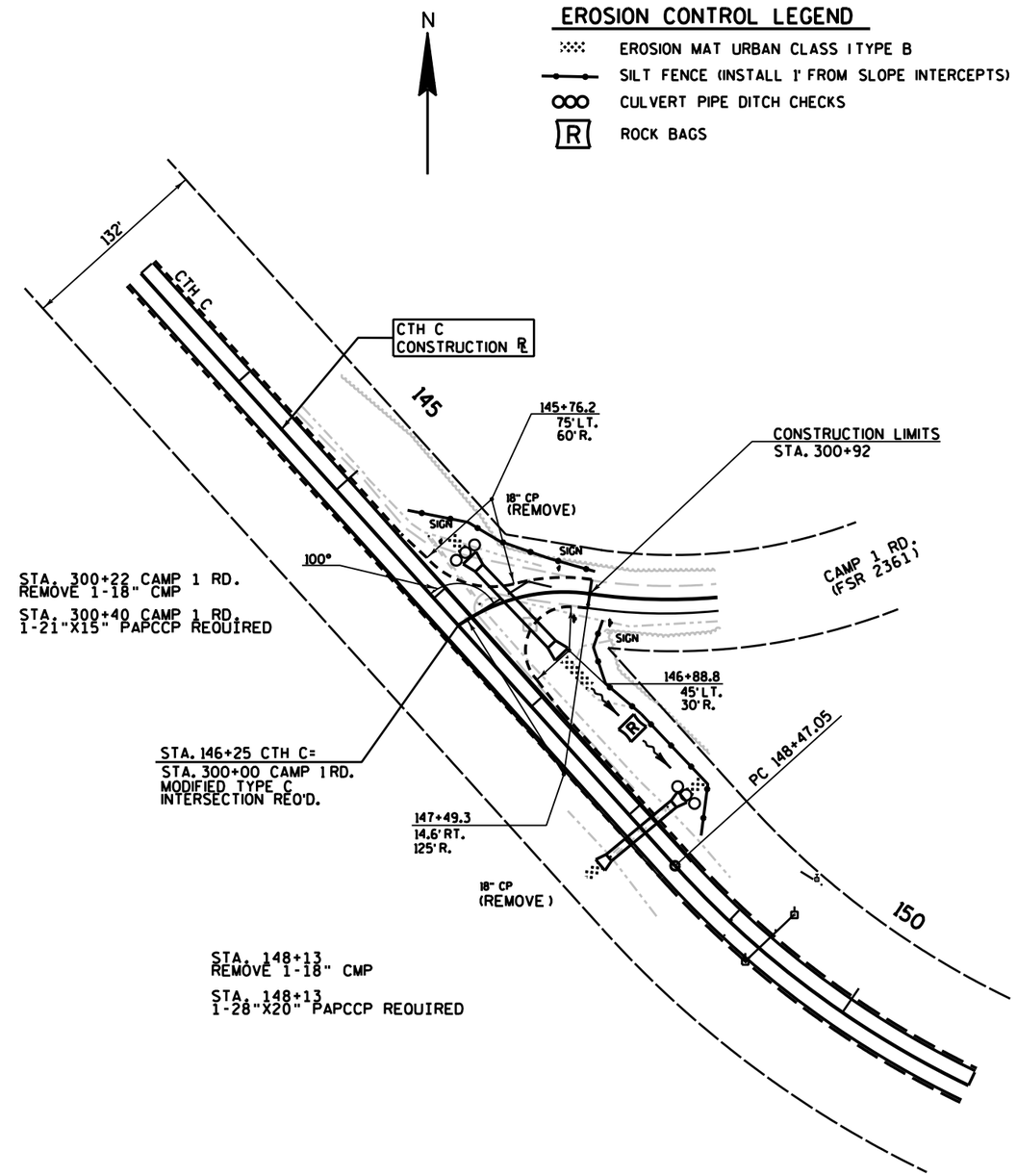

CONSTRUCTION DETAIL FOR GRADING AND SHAPING INTERSECTION

CAMP 1 ROAD

3

DATE 17OCT11 E S T I M A T E O F Q U A N T I T I E S

LINE NUMBER	ITEM	ITEM DESCRIPTION	UNIT	TOTAL	9330-00-70 QUANTITY
0010	201.0105	CLEARING	STA	19.000	19.000
0020	201.0205	GRUBBING	STA	19.000	19.000
0030	203.0100	REMOVING SMALL PIPE CULVERTS	EACH	23.000	23.000
0040	205.0100	EXCAVATION COMMON	CY	4,406.000	4,406.000
0050	205.9010.S	GRADING & SHAPING INTERSECTION (LOCATION) 01. CAMP 1 ROAD	LS	1.000	1.000
0060	208.0100	BORROW	CY	2,886.000	2,886.000
0070	211.0400	PREPARE FOUNDATION FOR ASPHALTIC SHOULDERS	STA	700.000	700.000
0080	213.0100	FINISHING ROADWAY (PROJECT) 01. 9330-00-70	EACH	1.000	1.000
0090	305.0110	BASE AGGREGATE DENSE 3/4-INCH	TON	8,200.000	8,200.000
0100	305.0120	BASE AGGREGATE DENSE 1 1/4-INCH	TON	3,750.000	3,750.000
0110	306.0115	SALVAGED ASPHALTIC PAVEMENT BASE	CY	424.000	424.000
0120	313.0115	PIT RUN	CY	5,225.000	5,225.000
0130	325.0100	PULVERIZE AND RELAY	SY	134,140.000	134,140.000
0140	440.4410.S	INCENTIVE IRI RIDE	DOL	44,500.000	44,500.000
0150	455.0105	ASPHALTIC MATERIAL PG58-28	TON	799.000	799.000
0160	455.0110	ASPHALTIC MATERIAL PG58-34	TON	796.000	796.000
0170	455.0605	TACK COAT	GAL	3,600.000	3,600.000
0180	460.1100	HMA PAVEMENT TYPE E-0.3	TON	28,960.000	28,960.000
0190	460.2000	INCENTIVE DENSITY HMA PAVEMENT	DOL	18,550.000	18,550.000
0200	521.1024	APRON ENDWALLS FOR CULVERT PIPE STEEL 24-INCH	EACH	22.000	22.000
0210	521.1042	APRON ENDWALLS FOR CULVERT PIPE STEEL 42-INCH	EACH	2.000	2.000
0220	521.1221	APRON ENDWALLS FOR PIPE ARCH STEEL 21X15-INCH	EACH	4.000	4.000
0230	521.1228	APRON ENDWALLS FOR PIPE ARCH STEEL 28X20-INCH	EACH	22.000	22.000
0240	521.1242	APRON ENDWALLS FOR PIPE ARCH STEEL 42X29-INCH	EACH	2.000	2.000
0250	528.0124	CULVERT PIPE CORRUGATED STEEL POLYMER COATED 24-INCH	LF	532.000	532.000
0260	528.0142	CULVERT PIPE CORRUGATED STEEL POLYMER COATED 42-INCH	LF	58.000	58.000
0270	528.0321	PIPE ARCH POLYMER COATED CORRUGATED STEEL 21X15-INCH	LF	54.000	54.000
0280	528.0328	PIPE ARCH POLYMER COATED CORRUGATED STEEL 28X20-INCH	LF	524.000	524.000
0290	528.0342	PIPE ARCH POLYMER COATED CORRUGATED STEEL 42X29-INCH	LF	48.000	48.000
0300	606.0200	RIPRAP MEDIUM	CY	35.000	35.000
0310	619.1000	MOBILIZATION	EACH	1.000	1.000
0320	621.0100	LANDMARK REFERENCE MONUMENTS	EACH	8.000	8.000
0330	624.0100	WATER	MGAL	420.000	420.000
0340	625.0100	TOPSOIL	SY	6,550.000	6,550.000
0350	625.0105	TOPSOIL	CY	200.000	200.000
0360	627.0200	MULCHING	SY	900.000	900.000
0370	628.1504	SILT FENCE	LF	5,850.000	5,850.000
0380	628.1520	SILT FENCE MAINTENANCE	LF	5,850.000	5,850.000
0390	628.1905	MOBILIZATIONS EROSION CONTROL	EACH	6.000	6.000
0400	628.1910	MOBILIZATIONS EMERGENCY EROSION CONTROL	EACH	4.000	4.000
0410	628.2008	EROSION MAT URBAN CLASS I TYPE B	SY	7,700.000	7,700.000
0420	628.7555	CULVERT PIPE CHECKS	EACH	110.000	110.000
0430	628.7570	ROCK BAGS	EACH	85.000	85.000

3

3

DATE 17OCT11 E S T I M A T E O F Q U A N T I T I E S

LINE NUMBER	ITEM	ITEM DESCRIPTION	UNIT	TOTAL	9330-00-70 QUANTITY
0440	629.0210	FERTILIZER TYPE B	CWT	6.000	6.000
0450	630.0120	SEEDING MIXTURE NO. 20	LB	200.000	200.000
0460	630.0200	SEEDING TEMPORARY	LB	250.000	250.000
0470	630.0300	SEEDING BORROW PIT	LB	50.000	50.000
0480	633.5200	MARKERS CULVERT END	EACH	52.000	52.000
0490	634.0614	POSTS WOOD 4X6-INCH X 14-FT	EACH	53.000	53.000
0500	634.0616	POSTS WOOD 4X6-INCH X 16-FT	EACH	8.000	8.000
0510	637.0202	SIGNS REFLECTIVE TYPE II	SF	378.800	378.800
0520	638.2602	REMOVING SIGNS TYPE II	EACH	40.000	40.000
0530	638.3000	REMOVING SMALL SIGN SUPPORTS	EACH	40.000	40.000
0540	642.5001	FIELD OFFICE TYPE B	EACH	1.000	1.000
0550	643.0100	TRAFFIC CONTROL (PROJECT) 01. 9330-00-70	EACH	1.000	1.000
0560	643.0420	TRAFFIC CONTROL BARRICADES TYPE III	DAY	100.000	100.000
0570	643.0705	TRAFFIC CONTROL WARNING LIGHTS TYPE A	DAY	160.000	160.000
0580	643.0900	TRAFFIC CONTROL SIGNS	DAY	3,038.000	3,038.000
0590	645.0120	GEOTEXTILE FABRIC TYPE HR	SY	124.000	124.000
0600	646.0106	PAVEMENT MARKING EPOXY 4-INCH	LF	108,600.000	108,600.000
0610	648.0100	LOCATING NO-PASSING ZONES	MI	11.130	11.130
0620	649.0100	TEMPORARY PAVEMENT MARKING 4-INCH	LF	4,700.000	4,700.000
0630	650.4500	CONSTRUCTION STAKING SUBGRADE	LF	889.000	889.000
0640	650.5000	CONSTRUCTION STAKING BASE	LF	889.000	889.000
0650	650.6000	CONSTRUCTION STAKING PIPE CULVERTS	EACH	24.000	24.000
0660	650.8000	CONSTRUCTION STAKING RESURFACING REFERENCE	LF	58,054.000	58,054.000
0670	650.9910	CONSTRUCTION STAKING SUPPLEMENTAL CONTROL (PROJECT) 01. 9330-00-70	LS	1.000	1.000
0680	650.9920	CONSTRUCTION STAKING SLOPE STAKES	LF	1,839.000	1,839.000
0690	690.0150	SAWING ASPHALT	LF	42.000	42.000
0700	ASP.1T0A	ON-THE-JOB TRAINING APPRENTICE AT $5. 00/HR	HRS	2,000.000	2,000.000
0710	ASP.1T0G	ON-THE-JOB TRAINING GRADUATE AT $5.00/HR	HRS	1,260.000	1,260.000
0720	SPV.0060	SPECIAL 01. GRADING, SHAPING, AND TOPSOILING FOR CROSSDRAIN RESTORATION	EACH	23.000	23.000
0730	SPV.0060	SPECIAL 02. SECTION SURVEY MONUMENTS	EACH	5.000	5.000
0740	SPV.0060	SPECIAL 03. CORNER SURVEY MONUMENTS	EACH	2.000	2.000
0750	SPV.0060	SPECIAL 04. UTILITY LINE OPENING	EACH	23.000	23.000
0760	SPV.0090	SPECIAL 01. DITCHING	LF	135.000	135.000
0770	SPV.0090	SPECIAL 02. CONSTRUCTION STAKING EXCAVATION BELOW SUBGRADE	LF	520.000	520.000
0780	SPV.0180	SPECIAL 01. PULVERIZING HMA PAVEMENT	SY	1,650.000	1,650.000
0790	SPV.0180	SPECIAL 02. GEOGRID REINFORCEMENT SUBBASE	SY	4,550.000	4,550.000
0800	SPV.0180	SPECIAL 03. GEOGRID REINFORCEMENT BASE	SY	3,200.000	3,200.000

3

3

CLEARING AND GRUBBING

STATION - STATION	LOCATION	201.0105 CLEARING STATION	201.0205 GRUBBING STATION	COMMENT
84+00 - 88+00	CTH C	4	4	SLOPE FILLING
88+00 - 89+00	CTH C	1	1	CULVERT INSTALLATION
114+50 - 120+00	CTH C	6	6	SLOPE FILLING
122+00 - 123+00	CTH C	1	1	CULVERT INSTALLATION
148+00 - 149+00	CTH C	1	1	CULVERT INSTALLATION
245+00 - 248+00	CTH C	3	3	RECONSTRUCTION AREA
305+00 - 306+00	CTH C	1	1	CULVERT INSTALLATION
492+00 - 493+00	CTH C	1	1	CULVERT INSTALLATION
300+00 - 301+00	LINSE ROAD	1	1	RECONSTRUCTION AREA
TOTALS		19	19	

REMOVING SMALL PIPE CULVERTS

STATION	LOCATION	TYPE	DIAMETER INCH	LENGTH FEET	203.0100 EACH
17+61	CTH C	CMCP	24	50	1
44+90	CTH C	CMCP	36	47	1
73+99	CTH C	CMCP	24	41	1
88+78	CTH C	CMCP	36	59	1
98+96	CTH C	CMCP	18	45	1
113+12	CTH C	CMCP	24	51	1
122+92	CTH C	CMCP	24	47	1
148+13	CTH C	CMCP	18	46	1
173+87	CTH C	CMCP	18	61	1
224+92	CTH C	CMCP	24	55	1
245+81	CTH C	CMCP	24	50	1
254+63	CTH C	CMCP	24	42	1
305+44	CTH C	CMCP	24	61	1
341+68	CTH C	CMCP	24	61	1
363+50	CTH C	CMCP	24	48	1
452+70	CTH C	CMCP	24	39	1
492+78	CTH C	CMCP	24	60	1
506+47	CTH C	CMCP	24	45	1
521+57	CTH C	CMCP	24	53	1
531+17	CTH C	CMCP	24	42	1
544+36	CTH C	CMCP	24	44	1
558+27	CTH C	CMCP	24	42	1
300+20	CAMP 1 ROAD	CMCP	18	58	1
TOTAL					23

GRADING & SHAPING INTERSECTION

LOCATION	205.9010.S LS	ESTIMATED EARTHWORK (FOR INFORMATIONAL PURPOSES ONLY) CUT CY	FILL CY
CAMP 1 ROAD	1	40	10
TOTAL	1		

3

EARTHWORK SUMMARY

Division	From/To Station	Location	Common Excavation (1)	(item # 205.0100)	Salvaged Pavement Material (4)	Available Material (5)	Expanded EBS Backfill (11)	Unexpanded Fill	Expanded Fill (13)	Mass Ordinate +/- (14)	Waste	Borrow	Pit Run	Comment:
			Cut (2)	EBS Excavation (3)			Factor 1.30		Factor 1.30			(item #208.0100)	(item #313.0115)	
1	84+00 - 88+00	CTH C	0	0	0	0	0	241	314	-314	0	314	0	
	114+50 - 120+00	CTH C	0	0	0	0	0	379	493	-493	0	493	0	
	244+50 - 251+50	CTH C	458	2,113	458	0	2,747	1,616	2,101	-2,101	2,113	0	4,848	
	300+50 - 302+00	LINSE ROAD	82	153	0	82	199	137	178	-96	153	0	377	
	230+90 - 233+00	CTH C RESURFACE EBS	0	1,022	0	0	1,329	0	0	0	1,022	1,329	0	
	255+20 - 258+30	CTH C RESURFACE EBS	0	578	0	0	751	0	0	0	578	751	0	
Division 1 Total			540	3,866	458	82	5,026	2,373	3,085	-3,003	3,866	2,886	5,225	
			Total Common Exc	4,406										

1) Common Excavation is the sum of the Cut and EBS Excavation columns. Item number 205.0100
2) Salvaged Pavement Material is included in Cut.
3) EBS Excavation to be backfilled with Pit Run and Borrow. EBS to be wasted.
4) Salvaged Pavement Material to be stockpiled and used as Salvage Asphaltic Pavement Base in EBS areas.
5) Available Material = Cut - Salvaged Pavement Material
11) Expanded EBS Backfill - This is to be filled with Pit Run Station 244+50 - 251+50 CTH C & 300+50 - 302+00 Linse Road. EBS Backfill Factor = 1.3.
11) Expanded EBS Backfill - This is to be filled with Borrow in Resurface EBS Areas. EBS Backfill Factor = 1.3.
13) Expanded Fill. Factor = 1.3 Expanded Fill = Unexpanded Fill * Fill Factor
14) The Mass Ordinate + or - Qty calculated for the Division. Plus quantity indicates an excess of material within the Division. Minus indicates a shortage of material within the Division.
14) The Mass Ordinate does not include EBS or Salvaged Pavement Material

3

PREPARE FOUNDATION FOR ASPHALTIC SHOULDERS

STATION	TO	STATION	LOCATION	211.0400 STA	REMARKS
251+50	-	601+50 LT	CTH C	350	EXTENDED FOR PAVED SHOUDER
251+51	-	601+50 RT	CTH C	350	EXTENDED FOR PAVED SHOUDER
TOTAL				700	

BASE AGGREGATE DENSE AND WATER

STATION	TO	STATION	LOCATION	305.0110 3/4-INCH TON	305.0120 1 1/4-INCH TON	624.0100 WATER MGAL
14+00	-	244+50	CTH C	3,000	-	30
244+50	-	251+50	CTH C	100	1,400	15
251+50	-	601+54	CTH C	4,600	-	46
300+11	-	300+92	CAMP 1 ROAD	-	150	2
300+11	-	302+00	LINSE ROAD	-	250	3
			CTH C WEDGING AREAS	-	1,600	16
			CULVERT PIPES	-	350	4
			DRIVEWAYS & SIDEROADS	500	-	5
			PULVERIZE AREAS	-	-	300
TOTALS				8,200	3,750	420

SALVAGED ASPHALTIC PAVEMENT BASE

STATION	TO	STATION	LOCATION	306.0115 CY	COMMENT
230+90	-	233+00	CTH C	171	EBS RESURFACE AREAS
255+20	-	258+30	CTH C	253	EBS RESURFACE AREAS
TOTAL				424	

PULVERIZE AND RELAY

STATION	TO	STATION	LOCATION	325.0100 S.Y.
14+00	-	244+50	CTH C	56,350
251+50	-	601+54	CTH C	77,790
TOTAL				134,140

INCENTIVE IRI RIDE

STATION	TO	STATION	LOCATION	440.4410.S DOL
14+00	-	601+54	CTH C	44,500
TOTAL				44,500

HMA PAVEMENT ITEMS

STATION	TO	STATION	LOCATION	455.0105 ASPHALTIC MATERIAL PG58-28 (5.5%) TON	455.0110 ASPHALTIC MATERIAL PG58-34 (5.5%) TON	455.0605 TACK COAT GAL	460.1100 HMA PAVEMENT TYPE E-0.3 TON	460.2000 DENSITY INCENTIVE HMA PAVEMENT DOL
14+00	-	244+50	CTH C	312	312	1,410	11,340	7,260
244+50	-	251+50	CTH C	13	10	50	400	260
251+50	-	601+54	CTH C	474	474	2,140	17,220	11,030
TOTALS				799	796	3,600	28,960	18,550

3

3

CULVERT PIPE

Existing elevations incorrect. See sheet 16A for as-built culvert information.

STATION	LOCATION	528.0124 CORRUGATED STEEL POLYMER COATED 24-INCH LF	528.0142 CORRUGATED STEEL POLYMER COATED 42-INCH LF	528.0321 PIPE ARCH POLYMER COATED CORREGATED STEEL 21x15-INCH LF	528.0328 PIPE ARCH POLYMER COATED CORREGATED STEEL 28x20-INCH LF	528.0342 PIPE ARCH POLYMER COATED CORREGATED STEEL 42x29-INCH LF	THICKNESS (INCHES) STEEL	521.1024 APRON ENDWALLS CULVERT PIPE STEEL 24-INCH EACH	521.1042 APRON ENDWALLS CULVERT PIPE STEEL 42-INCH EACH	521.1221 APRON ENDWALLS PIPE ARCH STEEL 21 X 15-INCH EACH	521.1228 APRON ENDWALLS PIPE ARCH STEEL 28 X 20-INCH EACH	521.1242 APRON ENDWALLS PIPE ARCH STEEL 42 X 29-INCH EACH	633.5200 MARKERS CULVERT END EACH	EXISTING ELEVATION INLET	EXISTING ELEVATION OUTLET	PROPOSED ELEVATION INLET	PROPOSED ELEVATION OUTLET	FLOWS	OFFSETS LEFT	OFFSETS RIGHT
17+61	CTH C	50	-	-	-	-	0.064	2	-	-	-	-	2	1553.22	1552.1	1553.20	1552.10	RT - LT	26'	24'
44+90	CTH C	-	-	-	-	48	0.079	-	-	-	-	2	2	1494.07	1493.56	1494.10	1493.90	LT - RT	23.5'	24.5'
73+99	CTH C	-	-	-	48	-	0.064	-	-	-	2	-	2	1488.38	1487.99	1488.20	1487.30	LT - RT	24..5'	23.5'
88+78 *	CTH C	-	58	-	-	-	0.109	-	2	-	-	-	2	1488.84	1486.30	1487.00	1485.00	LT - RT	29'	29'
96+15 LT	CTH C	-	-	-	-	-	-	-	-	2	-	-	2	-	-	-	-	-	-	-
98+96	CTH C	48	-	-	-	-	0.064	2	-	-	-	-	2	1481.87	1481.16	1481.85	1481.20	LT - RT	25.5'	22.5'
113+12	CTH C	-	-	-	54	-	0.064	-	-	-	2	-	2	1476.24	1473.67	1475.50	1473.70	LT - RT	24'	30'
122+92	CTH C	-	-	-	48	-	0.064	-	-	-	2	-	2	1474.95	1472.45	1474.70	1472.50	LT - RT	24.5'	23.5'
148+13	CTH C	-	-	-	46	-	0.064	-	-	-	2	-	2	1445.88	1445.85	1445.35	1445.20	LT - RT	21'	25'
173+87	CTH C	62	-	-	-	-	0.064	2	-	-	-	-	2	1447.57	1445.50	1447.60	1445.50	LT - RT	26.5'	35.5'
224+92	CTH C	56	-	-	-	-	0.064	2	-	-	-	-	2	1420.27	1413.66	1420.10	1413.70	LT - RT	20.5'	35.5'
245+81	CTH C	-	-	-	50	-	0.064	-	-	-	2	-	2	1364.96	1364.90	1365.40	1465.25	LT - RT	24.5'	25.5'
254+63	CTH C	-	-	-	42	-	0.064	-	-	-	2	-	2	1398.38	1396.84	1397.75	1396.30	LT - RT	18', 254+67	23', 254+58
305+44	CTH C	58	-	-	-	-	0.064	2	-	-	-	-	2	1319.85	1317.94	1320.00	1318.00	RT - LT	28.5'	29.5'
341+68	CTH C	58	-	-	-	-	0.064	2	-	-	-	-	2	1333.79	1332.65	1333.80	1333.30	RT - LT	31'	25'
363+50	CTH C	-	-	-	48	-	0.064	-	-	-	2	-	2	1336.60	1334.75	1335.60	1334.85	RT - LT	25'	23'
428+00	CTH C	-	-	-	-	-	0.064	2	-	-	-	-	2	-	-	-	-	-	-	-
452+70	CTH C	-	-	-	44	-	0.064	-	-	-	2	-	2	1346.92	1346.35	1345.90	1345.60	LT - RT	21.5'	22.5'
492+78	CTH C	58	-	-	-	-	0.064	2	-	-	-	-	2	1309.47	1306.55	1309.50	1308.00	RT - LT	31'	25'
506+47	CTH C	46	-	-	-	-	0.064	2	-	-	-	-	2	1308.25	1307.75	1308.25	1307.75	LT - RT	21.5'	24.5'
521+57	CTH C	54	-	-	-	-	0.064	2	-	-	-	-	2	1306.06	1305.81	1306.10	1305.80	LT - RT	25.5'	28.5'
531+17	CTH C	-	-	-	42	-	0.064	-	-	-	2	-	2	1308.29	1308.28	1308.10	1307.90	RT - LT	21.5'	20.5'
544+36	CTH C	-	-	-	46	-	0.064	-	-	-	2	-	2	1296.63	1296.52	1296.10	1295.90	RT - LT	23.5'	22.5'
558+27	CTH C	42	-	-	-	-	0.064	2	-	-	-	-	2	1292.51	1292.16	1292.50	1292.20	RT - LT	20.5'	21.5'
300+38	CAMP 1 ROAD	-	-	54	-	-	0.064	-	-	2	-	-	2	1448.90	1448.48	1446.55	1446.40	LT - RT	22.5'	31.5'
300+50	LINSE ROAD	-	-	-	56	-	0.064	-	-	-	2	-	2	-	-	1365.90	1365.70	RT - LT	28'	28'
TOTALS		532	58	54	524	48		22	2	4	22	2	52							

12 additional Culvert End Markers placed throughout project on existing pipes replaced previously by USFS.

REMARKS:

-FINAL LOCATION TO BE DETERMINED BY THE ENGINEER.
*CULVERT AT STATION 88+78 TO BE BURIED.
-OFFSETS ARE FROM REFERENCE LINE.
-ENDWALLS ONLY FOR CULVERT AT STATION 428+00
-ENDWALLS ONLY FOR CULVERT AT STATION 96+15 LT (INDIAN MARKET ROAD)

521.1024 APRON ENDWALLS STEEL 24-INCH
521.1048 APRON ENDWALLS STEEL 48-INCH
521.1221 APRON ENDWALLS STEEL 21x15-INCH
521.1228 APRON ENDWALLS STEEL 28x20-INCH
521.1242 APRON ENDWALLS STEEL 42x29-INCH
528.0124 CULVERT PIPE CORRUGATED STEEL POLYMER COATED 24-INCH
528.0142 CULVERT PIPE CORRUGATED STEEL POLYMER COATED 42-INCH
528.0321 PIPE ARCH POLYMER COATED 21x15-INCH
528.0328 PIPE ARCH POLYMER COATED 28x20-INCH
528.0342 PIPE ARCH POLYMER COATED 42x29-INCH

	ENDWALLS					CULVERT PIPE							
	24-INCH	48-INCH	21x15 IN	28x20 IN	42x49 IN	24-INCH	48-INCH	21x15 IN	28x20 IN	42x49 IN			
STATION	EACH	EACH	EACH	EACH	EACH	LF	LF	LF	LF	LF	IE	OE	FLOW DIR.
17+61	2	--	--	--	--	52	--	--	--	--	1554.41	1552.58	R-L
19+98	2	--	--	--	--	62	--	--	--	--	1550.54	1552.70	R-L
44+90	--	--	--	--	2	--	--	--	--	48	1494.30	1493.88	L-R
73+99	--	--	--	2	--	--	--	--	46	--	1488.28	1487.22	L-R
96+15	--	--	2	--	--	--	--	--	--	--	--	--	ENDWALLS ONLY
88+78	--	2	--	--	--	--	58	--	--	--	1487.12	1485.00	L-R
98+96	2	--	--	--	--	48	--	--	--	--	1487.12	1485.00	L-R
113+12	--	--	--	2	--	--	--	--	50	--	1475.50	1473.70	L-R
122+92	--	--	--	2	--	--	--	--	46	--	1474.23	1471.73	L-R
148+13	--	--	--	2	--	--	--	--	46	--	1445.45	1225.22	L-R
300+40 (CAMP 1 RD)	--	--	2	--	--	--	--	44	--	--	1446.50	1446.40	L-R
224+92	2	--	--	--	--	58	--	--	--	--	1420.15	1415.10	L-R
254+63	--	--	--	2	--	--	--	--	44	--	1397.88	1396.25	L-R
305+44	2	--	--	--	--	58	--	--	--	--	1319.81	1318.22	R-L
341+68	2	--	--	--	--	58	--	--	--	--	1333.90	1332.48	R-L
173+87	2	--	--	--	--	62	--	--	--	--	1447.98	1445.61	L-R
363+50	--	--	--	2	--	--	--	--	48	--	1335.55	1334.89	R-L
452+70	--	--	--	2	--	--	--	--	48	--	1345.84	1345.78	L-R
492+78	2	--	--	--	--	56	--	--	--	--	1309.50	1306.95	R-L
506+47	2	--	--	--	--	46	--	--	--	--	1308.13	1307.87	R-L
428+00	2	--	--	--	--	--	--	--	--	--	--	--	ENDWALLS ONLY
521+57	2	--	--	--	--	54	--	--	--	--	1306.38	1306.34	FLAT
531+17	--	--	--	2	--	--	--	--	44	--	1308.69	1308.46	R-L
245+81	--	--	--	2	--	--	--	--	50	--	1365.40	1365.35	L-R
55+55	--	--	--	2	--	--	--	--	46	--	NO CONTROL IN AREA		
300+50 (LINSE RD)	--	--	--	2	--	--	--	--	56	--	1365.85	1365.68	R-L
544+36	2	--	--	--	--	48	--	--	--	--	1295.61	1295.60	R-L
558+27	2	--	--	--	--	46	--	--	--	--	1292.46	1291.98	R-L

3

MONUMENT SUMMARY

STATION	LOCATION	DESCRIPTION	621.0100 LANDMARK REFERENCE EACH	SPV.0060.02 SECTION SURVEY EACH	SPV.0060.03 CORNER SURVEY EACH
209+25.67 - 2.13' RT.	CTH C	1/16 CORNER WEST OF S QUARTER CORNER SECTION 12, T34N, R15E	-	-	1
222+23.75 - 3.98' RT.	CTH C	S QUARTER CORNER SECTION 12, T34N, R15E	2	1	-
248+51.29 - 1.23' LT.	CTH C	SE CORNER SECTION 12, T34N, R15E	4	1	-
270+70.36 - 5.65' LT.	CTH C	1/16 CORNER WEST OF S QUARTER CORNER SECTION 7, T34N, R16E	-	-	1
284+34.35 - 13.53 LT.	CTH C	S QUARTER CORNER SECTION 7, T34N, R16E	-	1	-
460+96.62 - 0.15' RT.	CTH C	S QUARTER CORNER SECTION 15, T34N, R16E	1	1	-
487+27.94 - 2.16' LT.	CTH C	SE CORNER SECTION 15, T34N, R16E	1	1	-
TOTALS			8	5	2

TOPSOIL, MULCHING, FERTILIZER, AND SEED

STATION	TO	STATION	LOCATION	625.0100 TOPSOIL SY	626.0105 TOPSOIL CY	627.0200 MULCHING SY	629.0210 FERTILIZER TYPE B CWT.	630.0120 SEEDING MIXTURE NO 20 LB.	630.0200 SEEDING TEMPORARY LB.	630.0300 SEEDING BORROW PIT LB.
84+00	-	88+00	CTH C, RT	1000	-	-	0.6	26	26	-
114+50	-	120+00	CTH C, RT	2,100	-	-	1.3	57	57	-
147+00	-	148+05	CTH C, LT	175	-	175	0.1	5	5	-
244+50	-	251+50	CTH C	2,300	-	-	1.5	62	62	-
300+00	-	300+92	CAMP 1 ROAD	475	-	475	0.3	13	13	-
300+00	-	302+00	LINSE ROAD	500	-	-	0.3	14	14	-
			UNDISTRIBUTED	-	200	250	1.9	23	73	50
TOTALS				6,550	200	900	6	200	250	50

REMARKS:
-CY OF TOPSOIL LOCATIONS TO BE DETERMINED BY THE ENGINEER

SILT FENCE

STATION	LOCATION	628.1504 QUANTITY LF	628.1520 MAINTENANCE LF	REMARKS
17+61, RT. & LT.	CTH C	80	80	CULVERT ENDS
44+90, RT. & LT.	CTH C	80	80	CULVERT ENDS
73+99, RT. & LT.		80	80	CULVERT ENDS
84+00 - 88+00 RT.	CTH C	440	440	TOE OF SLOPE
88+78, RT. & LT.	CTH C	80	80	CULVERT ENDS
98+96, RT. & LT.	CTH C	80	80	CULVERT ENDS
113+12, RT. & LT.	CTH C	80	80	CULVERT ENDS
114+50 - 120+00 RT.	CTH C	590	590	TOE OF SLOPE
122+92, RT. & LT.	CTH C	80	80	CULVERT ENDS
145+50 - 148+50 LT.	CTH C	360	360	
148+13, RT. & LT.	CTH C	80	80	CULVERT ENDS
173+87, RT. & LT.	CTH C	80	80	CULVERT ENDS
224+92, RT. & LT.	CTH C	80	80	CULVERT ENDS
244+50 - 251+50 RT.	CTH C	740	740	TOE OF SLOPE
244+50 - 251+50 LT.	CTH C	670	670	TOE OF SLOPE
254+63, RT. & LT.	CTH C	80	80	CULVERT ENDS
305+44, RT. & LT.	CTH C	80	80	CULVERT ENDS
341+68, RT. & LT.	CTH C	80	80	CULVERT ENDS
363+50, RT. & LT.	CTH C	80	80	CULVERT ENDS
452+70, RT. & LT.	CTH C	80	80	CULVERT ENDS
492+78, RT. & LT.	CTH C	80	80	CULVERT ENDS
506+47, RT. & LT.	CTH C	80	80	CULVERT ENDS
521+57, RT. & LT.	CTH C	80	80	CULVERT ENDS
531+17, RT. & LT.	CTH C	80	80	CULVERT ENDS
544+36, RT. & LT.	CTH C	80	80	CULVERT ENDS
558+27, RT. & LT.	CTH C	80	80	CULVERT ENDS
300+30 - 302+00 RT.	LINSE ROAD	195	195	TOE OF SLOPE
300+45 - 302+00 LT.	LINSE ROAD	180	180	TOE OF SLOPE
UNDISTRIBUTED		995	995	
TOTALS		5,850	5,850	

3

3

RIPRAP MEDIUM AND GEOTEXTILE FABRIC TYPE HR

STATION	LOCATION	606.0200 RIP RAP MEDIUM CY	645.0120 GEOTEXTILE FABRIC TYPE HR SY	REMARKS
113+12, RT.	CTH C	5	18	PIPE ENDWALL
122+92, RT.	CTH C	5	18	PIPE ENDWALL
173+87, RT.	CTH C	5	18	PIPE ENDWALL
224+92, RT.	CTH C	5	18	PIPE ENDWALL
254+63, RT.	CTH C	5	18	PIPE ENDWALL
	UNDISTRIBUTED	10	34	
TOTALS		35	124	

ROCK BAGS

STATION	LOCATION	628.7570 EACH	REMARKS
86+00 RT.	CTH C	8	SILT FENCE RELIEF
117+00 RT.	CTH C	8	SILT FENCE RELIEF
147+50 LT.	CTH C	6	DITCH CHECK
245+81 LT.	CTH C	8	SILT FENCE RELIEF
245+81 RT.	CTH C	8	SILT FENCE RELIEF
246+00 LT.	CTH C	6	DITCH CHECK
249+00 LT.	CTH C	8	SILT FENCE RELIEF
249+00 RT.	CTH C	8	SILT FENCE RELIEF
300+50, RT.	LINSE ROAD	8	SILT FENCE RELIEF
	UNDISTRIBUTED	17	SILT FENCE RELIEF
TOTAL		85	

EROSION MAT URBAN CLASS I TYPE B

STATION	LOCATION	628.2008 SY
17+61, RT. & LT.	CTH C	22
44+90, RT. & LT.	CTH C	28
73+99, RT. & LT.	CTH C	22
84+00 - 88+00 RT.	CTH C	1000
88+78, RT. & LT.	CTH C	22
98+96, RT. & LT.	CTH C	22
113+12, RT. & LT.	CTH C	20
114+50 - 120+00, RT	CTH C	2100
122+92, RT. & LT.	CTH C	20
148+13, RT. & LT.	CTH C	22
173+87, RT. & LT.	CTH C	22
224+92, RT. & LT.	CTH C	22
244+50 - 250+50	CTH C	2,300
254+63, RT. & LT.	CTH C	20
305+44, RT. & LT.	CTH C	22
323+67, RT. & LT.	CTH C	22
341+68, RT. & LT.	CTH C	22
363+50, RT. & LT.	CTH C	22
428+00, RT. & LT.	CTH C	22
452+70, RT. & LT.	CTH C	22
492+78, RT. & LT.	CTH C	22
506+47, RT. & LT.	CTH C	22
521+57, RT. & LT.	CTH C	22
531+17, RT. & LT.	CTH C	22
544+36, RT. & LT.	CTH C	22
558+27, RT. & LT.	CTH C	22
300+38, RT. & LT.	CAMP 1 ROAD	22
300+00 - 302+00	LINSE ROAD	500
	UNDISTRIBUTED	1272
TOTAL		7,700

CULVERT PIPE CHECKS

STATION	LOCATION	628.7555 EACH
17+61 RT.	CTH C	4
44+90 LT.	CTH C	6
73+99 LT.	CTH C	4
113+12 LT.	CTH C	4
122+92 LT.	CTH C	4
148+13 LT.	CTH C	4
173+87 LT.	CTH C	4
224+92 LT.	CTH C	4
245+81 LT.	CTH C	4
254+63 LT.	CTH C	4
305+44 RT.	CTH C	4
341+68 RT.	CTH C	4
363+50 RT.	CTH C	4
452+70 LT.	CTH C	4
492+78, RT.	CTH C	4
506+47, LT.	CTH C	4
521+57, LT.	CTH C	4
531+17, RT.	CTH C	4
544+36, RT.	CTH C	4
558+27, RT.	CTH C	4
300+40, LT.	CAMP 1 ROAD	2
300+50, RT.	LINSE ROAD	4
	UNDISTRIBUTED	22
TOTAL		110

3

3

ERECTION & REMOVAL OF PERMANENT SIGNING, TYPE II

SIGN NO.	LOCATION	SIGN CODE	W X H	637.0202 SIGNS REFLECTIVE TYPE II S.F.	634.0614 POSTS WOOD 4x6x14 EACH	634.0616 POSTS WOOD 4x6x16 EACH	638.2602 REMOVING SIGNS TYPE II EACH	638.3000 REMOVING SMALL SIGN SUPPORTS EACH	REMARKS
1	E. OF THIRD ST	R2-1	24" X 30"	5.00	1				45 MPH
2	"	SP					1	1	"SPEED ZONE ENDS"
3	"	R2-1	24" X 30"	5.00	1		1	1	25 MPH
4	"	R2-5A					1	1	"REDUCE SPEED AHEAD"
5	"	W3-5	36" X 36"	9.00	1				25 MPH
6	W. OF SOPER ST	W11-5	30" X 30"	6.25	1		1	1	
7	SOPER ST	R1-1	30" X 30"	5.18	1		1	1	
8	E. OF SOPER ST	W1-2L	30" X 30"	6.25	1		1	1	
9	"	W1-4L	30" X 30"	6.25		1	1	1	
10	"	W13-1	18" X 18"	2.25					40 MPH, MOUNT BELOW SIGN #9
11	"	W1-2R	30" X 30"	6.25	1		1	1	
12	"	R2-1	24" X 30"	5.00	1				45 MPH
13	W. OF INDIAN MARKET RD	S3-1	36" X 36"	9.00	1		1	1	
14	"	W1-2R	30" X 30"	6.25		1	1	1	
15	"	W13-1	18" X 18"	2.25					40 MPH, MOUNT BELOW SIGN #14
16	"	W1-4L	30" X 30"	6.25		1			
17	"	W13-1	18" X 18"	2.25					40 MPH, MOUNT BELOW SIGN #16
18	"	S3-1	36" X 36"	9.00	1		1	1	
19	INDIAN MARKET RD	R1-1	30" X 30"	5.18	1		1	1	
20	E. OF INDIAN MARKET RD	W1-2L	30" X 30"	6.25		1			
21	"	W13-1	18" X 18"	2.25					40 MPH, MOUNT BELOW SIGN #20
22	"	W1-4R	30" X 30"	6.25		1	1	1	
23	"	W13-1	18" X 18"	2.25					40 MPH, MOUNT BELOW SIGN #22
24	W. OF CAMP 1 RD	W1-4R	30" X 30"	6.25		1	1	1	
25	"	W13-1	18" X 18"	2.25					40 MPH, MOUNT BELOW SIGN #24
26	"	W1-2L	30" X 30"	6.25	1		1	1	
27	CAMP 1 RD	R1-1	30" X 30"	5.18	1		1	1	
28	E. OF CAMP 1 RD	W1-2R	30" X 30"	6.25	1		1	1	
29	"	R2-1	24" X 30"	5.00	1				45 MPH
30	"	R2-1	24" X 30"	5.00	1				45 MPH
31	"	W1-4R	30" X 30"	6.25		1	1	1	
32	"	W13-1	18" X 18"	2.25					40 MPH, MOUNT BELOW SIGN #31
33	FR 2728	R1-1	30" X 30"	5.18	1		1	1	
34	W. OF LINSE RD	W1-4R	30" X 30"	6.25		1	1	1	
35	"	W13-1	18" X 18"	2.25					40 MPH, MOUNT BELOW SIGN #34
36	VACANT								
37	W. OF LINSE RD	R2-1	24" X 30"	5.00	1				45 MPH
38	"	R2-1	24" X 30"	5.00	1				45 MPH
39	LINSE RD	R1-1	30" X 30"	5.18	1		1	1	

3

ERECTION & REMOVAL OF PERMANENT SIGNING, TYPE II

SIGN NO.	LOCATION	SIGN CODE	W X H	637.0202 SIGNS REFLECTIVE TYPE II S.F.	634.0614 POSTS WOOD 4x6x14 EACH	634.0616 POSTS WOOD 4x6x16 EACH	638.2602 REMOVING SIGNS TYPE II EACH	638.3000 REMOVING SMALL SIGN SUPPORTS EACH	REMARKS
40	E. OF LINSE RD	R2-1	24" X 30"	5.00	1				45 MPH
41	"	R2-1	24" X 30"	5.00	1				45 MPH
42	"	W1-4R	30" X 30"	6.25	1		1	1	
43	"	S3-1	36" X 36"	9.00	1		1	1	
44	W. OF KNOWLES CREEK RD	R2-1	24" X 30"	5.00	1				45 MPH
45	KNOWLES CREEK RD	R1-1	30" X 30"	5.18	1		1	1	
46	E. OF KNOWLES CREEK RD	R2-1	24" X 30"	5.00	1				45 MPH
47	"	W1-4L	30" X 30"	6.25	1		1	1	
48	CTH W. OF LAKE DR	W1-4R	30" X 30"	6.25	1		1	1	
49	"	S3-1	36" X 36"	9.00	1		1	1	
50	LAKE DR	R1-1	30" X 30"	5.18	1		1	1	
51	E. OF LAKE DR	S3-1	36" X 36"	9.00	1		1	1	
52	"	R2-1	24" X 30"	5.00	1				45 MPH
53	"	R2-1	24" X 30"	5.00	1				45 MPH
54	"	W1-4L	30" X 30"	6.25	1		1	1	
55	"	W1-2L	30" X 30"	6.25	1		1	1	
56	"	W1-2R	30" X 30"	6.25	1		1	1	
57	"	R2-1	24" X 30"	5.00	1				45 MPH
57A	"	R2-1	24" X 30"	5.00	1				45 MPH
58	VACANT								
59	W. OF BAYSHORE RD	R2-1	24" X 30"	5.00	1				45 MPH
60	BAYSHORE RD	R1-1	30" X 30"	5.18	1		1	1	
61	E. OF BAYSHORE RD	R2-1	24" X 30"	5.00	1				45 MPH
62	McCASLIN TOWER RD	R1-1	30" X 30"	5.18	1		1	1	
63	E. OF McCASLIN TOWER RD	W1-4R	30" X 30"	6.25	1		1	1	
64	"	W1-4R	30" X 30"	6.25	1		1	1	
65	"	R2-1	24" X 30"	5.00	1				45 MPH
66	"	R2-1	24" X 30"	5.00	1				45 MPH
67	"	W1-4L	30" X 30"	6.25	1		1	1	
68	KING LAKE RD	R1-1	30" X 30"	5.18	1		1	1	
69	E. OF KING LAKE RD	W1-4L	30" X 30"	6.25	1		1	1	
70	"	R2-1	24" X 30"	5.00	1				45 MPH
71	"	W1-2L	30" X 30"	6.25	1		1	1	
72	"	R2-1	24" X 30"	5.00	1				45 MPH
	TOTALS			378.80	53	8	40	40	

3

TRAFFIC CONTROL SUMMARY

LOCATION	APPROXIMATE SERVICE DAYS	643.0420 BARRICADES TYPE III NO. IN SERVICE	643.0420 BARRICADES TYPE III DAYS	643.0705 WARNING LIGHTS TYPE A NO. IN SERVICE	643.0705 WARNING LIGHTS TYPE A DAYS	643.0900 SIGNS NO. IN SERVICE	643.0900 SIGNS DAYS	REMARKS
CTH C	75	-	-	-	-	5	375	START OF PROJECT - TYPICAL ADVANCE WARNING SIGNING WITH END ROAD WORK AND ROAD WORK NEXT 12 MILES
CTH C/SOPER STREET	75	-	-	-	-	1	75	ROAD WORK AHEAD
CTH C/ INDIAN MARKET ROAD	75	-	-	-	-	1	75	ROAD WORK AHEAD
CTH C/CAMP 1 ROAD	75	-	-	-	-	1	75	ROAD WORK AHEAD
CTH C/LINSE ROAD	70	-	-	-	-	1	70	ROAD WORK AHEAD
CTH C/ KNOWLES CREEK ROAD	75	-	-	-	-	1	75	ROAD WORK AHEAD
CTH C/LAKE DRIVE	75	-	-	-	-	1	75	ROAD WORK AHEAD
CTH C/BAY SHORE DRIVE	75	-	-	-	-	1	75	ROAD WORK AHEAD
CTH C/MCCASLIN TOWER ROAD	75	-	-	-	-	1	75	ROAD WORK AHEAD
CTH C/KING LAKE ROAD	75	-	-	-	-	1	75	ROAD WORK AHEAD
CTH C	75	-	-	-	-	5	375	END OF PROJECT - TYPICAL ADVANCE WARNING SIGNING WITH END ROAD WORK AND ROAD WORK NEXT 12 MILES
CTH C/STH 32	5	1	5	2	10	1	5	ROAD CLOSED 4 MILES AHEAD LOCAL TRAFFIC ONLY ON TYPE III BARRICADE
CTH C/CAMP 1 ROAD	5	1	5	2	10	1	5	ROAD CLOSED 2 MILES AHEAD LOCAL TRAFFIC ONLY ON TYPE III BARRICADE
STATION 244+50 CTH C	5	6	30	9	45	5	25	START OF RECONSTRUCTION - SEE STANDARD DETIAL FOR BARRICADES AND SIGNS FOR MAINLINE CLOSURE
STATION 251+50 CTH C	5	6	30	9	45	5	25	END OF RECONSTRUCTION - SEE STANDARD DETIAL FOR BARRICADES AND SIGNS FOR MAINLINE CLOSURE
LINSE ROAD	5	3	15	4	20	3	15	SEE STANDARD DETIAL FOR BARRICADES AND SIGNS FOR SIDEROAD CLOSURES
CTH C/KNOWLES CREEK ROAD	5	1	5	2	10	1	5	ROAD CLOSED 1 MILES AHEAD LOCAL TRAFFIC ONLY ON TYPE III BARRICADE
CTH C/CTH F	5	1	5	2	10	1	5	ROAD CLOSED 12 MILES AHEAD LOCAL TRAFFIC ONLY ON TYPE III BARRICADE
LINSE ROAD/KASEL LANE	5	1	5	2	10	1	5	ROAD CLOSED 1.5 MILES AHEAD LOCAL TRAFFIC ONLY ON TYPE III BARRICADE
CTH C	20	-	-	-	-	20	400	LOW SHOULDER AND UNEVEN LANES SIGNING
CTH C NO PASSING ZONES	40	-	-	-	-	24	960	NO PASSING ZONE SIGNING
CTH C NO CENTER STRIPE	14	-	-	-	-	12	168	NO CENTER STRIPE
TOTAL			100		160		3,038	

PAVEMENT MARKING

STATION	TO	STATION	LOCATION	646.0106 4-INCH EPOXY YELLOW LF	649.0100 4-INCH TEMPORARY YELLOW LF
14+00	-	601+54	CTH C	108,600	4,700
TOTAL				108,600	4,700

LOCATING NO-PASSING ZONES

STATION	TO	STATION	LOCATION	648.0100 MI
14+00	-	601+54	CTH C	11.13
TOTAL				11.13

SAWING ASPHALT

STATION	LOCATION	690.0150 LF	REMARKS
14+00	CTH C	22	PROJECT LIMITS
601+54	CTH C	20	PROJECT LIMITS
TOTAL		42	

3

3

CONSTRUCTION STAKING

STATION	TO	STATION	LOCATION	650.4500 SUBGRADE LF	650.5000 BASE LF	650.6000 PIPE CULVERTS EACH	650.8000 RESURFACING REFERENCE LF	650.9910 SUPPLEMENTAL CONTROL LS	650.9920 SLOPE STAKES LF	SPV.0090.02 EXCAVATION BELOW SUBGRADE LF
14+00	-	84+00	CTH C	-	-	3	7,000	1	-	-
84+00	-	88+00	CTH C	-	-	-	400	-	400	-
88+00	-	114+50	CTH C	-	-	4	2,650	-	-	-
114+50	-	120+00	CTH C	-	-	-	550	-	550	-
120+00	-	230+90	CTH C	-	-	4	11,090	-	-	-
230+90	-	233+00	CTH C	-	-	-	210	-	-	210
233+00	-	244+50	CTH C	-	-	-	1,150	-	-	-
244+50	-	251+50	CTH C	700	700	1	-	-	700	-
251+50	-	255+20	CTH C	-	-	1	370	-	-	-
255+20	-	258+30	CTH C	-	-	-	310	-	-	310
258+30	-	601+54	CTH C	-	-	10	34,324	-	-	-
300+11	-	302+00	LINSE ROAD	189	189	1	-	-	189	-
TOTALS				889	889	24	58,054	1	1,839	520

GRADING, SHAPING, AND TOPSOILING FOR CROSSDRAIN RESTORATION

STATION	LOCATION	SPV.0060.01 EACH	ESTIMATED FINISHING ITEMS (FOR INFORMATIONAL PURPOSES ONLY) TOPSOIL SY	FERTILIZER TYPE B CWT	SEEDING MIXTURE NO. 20 LBS	SEEDING TEMPORARY LBS
17+61	CTH C	1	22	0.01	0.6	0.6
44+90	CTH C	1	28	0.02	0.8	0.8
73+99	CTH C	1	22	0.01	0.6	0.6
88+78	CTH C	1	22	0.01	0.6	0.6
96+15 LT	CTH C	1	22	0.01	0.6	0.6
98+96	CTH C	1	22	0.01	0.6	0.6
113+12	CTH C	1	20	0.01	0.5	0.5
122+92	CTH C	1	20	0.01	0.5	0.5
148+13	CTH C	1	22	0.01	0.6	0.6
173+87	CTH C	1	22	0.01	0.6	0.6
224+92	CTH C	1	22	0.01	0.6	0.6
254+63	CTH C	1	20	0.01	0.5	0.5
305+44	CTH C	1	22	0.01	0.6	0.6
341+68	CTH C	1	22	0.01	0.6	0.6
363+50	CTH C	1	22	0.01	0.6	0.6
428+00	CTH C	1	22	0.01	0.6	0.6
452+70	CTH C	1	22	0.01	0.6	0.6
492+78	CTH C	1	22	0.01	0.6	0.6
506+47	CTH C	1	22	0.01	0.6	0.6
521+57	CTH C	1	22	0.01	0.6	0.6
531+17	CTH C	1	22	0.01	0.6	0.6
544+36	CTH C	1	22	0.01	0.6	0.6
558+27	CTH C	1	22	0.01	0.6	0.6
TOTALS		23				

3

UTILITY LINE OPENING

STATION	LOCATION	SPV.0060.04 EACH	REMARKS
17+61	CTH C	1	CULVERT INSTALLATION
44+90	CTH C	1	CULVERT INSTALLATION
73+99	CTH C	1	CULVERT INSTALLATION
88+78	CTH C	1	CULVERT INSTALLATION
96+15 LT	CTH C	1	ENDWALL INSTALLATION
98+96	CTH C	1	CULVERT INSTALLATION
113+12	CTH C	1	CULVERT INSTALLATION
122+92	CTH C	1	CULVERT INSTALLATION
148+13	CTH C	1	CULVERT INSTALLATION
173+87	CTH C	1	CULVERT INSTALLATION
224+92	CTH C	1	CULVERT INSTALLATION
254+63	CTH C	1	CULVERT INSTALLATION
305+44	CTH C	1	CULVERT INSTALLATION
341+68	CTH C	1	CULVERT INSTALLATION
363+50	CTH C	1	CULVERT INSTALLATION
428+00	CTH C	1	ENDWALL INSTALLATION
452+70	CTH C	1	CULVERT INSTALLATION
492+78	CTH C	1	CULVERT INSTALLATION
506+47	CTH C	1	CULVERT INSTALLATION
521+57	CTH C	1	CULVERT INSTALLATION
531+17	CTH C	1	CULVERT INSTALLATION
544+36	CTH C	1	CULVERT INSTALLATION
558+27	CTH C	1	CULVERT INSTALLATION
TOTAL		23	

DITCHING

STATION	TO	STATION	LOCATION	SPV.0090.01 LF
146+77	-	148+13	CTH C	135
TOTAL				135

GEOGRID REINFORCEMENT

STATION		STATION	LOCATION	SPV.0180.02 SUBBASE SY	SPV.0180.03 BASE SY
244+50	-	251+50	CTH C	-	2,900
244+50	-	250+75	CTH C	4,100	-
300+00	-	301+50	LINSE ROAD	450	300
TOTALS				4,550	3,200

PULVERIZING HMA PAVEMENT

STATION	TO	STATION	LOCATION	SPV.0180.01 SY
244+50	-	251+50	CTH C	1650
TOTAL				1,650

SCHEDULE OF LANDS AND INTERESTS REQUIRED

PARCEL NO.	OWNERSHIP	INTEREST REQUIRED	TOTAL ACRES	R/W ACRES NEW	R/W ACRES EXISTING	R/W ACRES TOTAL	TOTAL ACRES REMAINING	TLE ACRES
1	U.S. DEPT. OF AGRICULTURE FOREST SERVICE	TLE	----	----	----	----	----	0.08

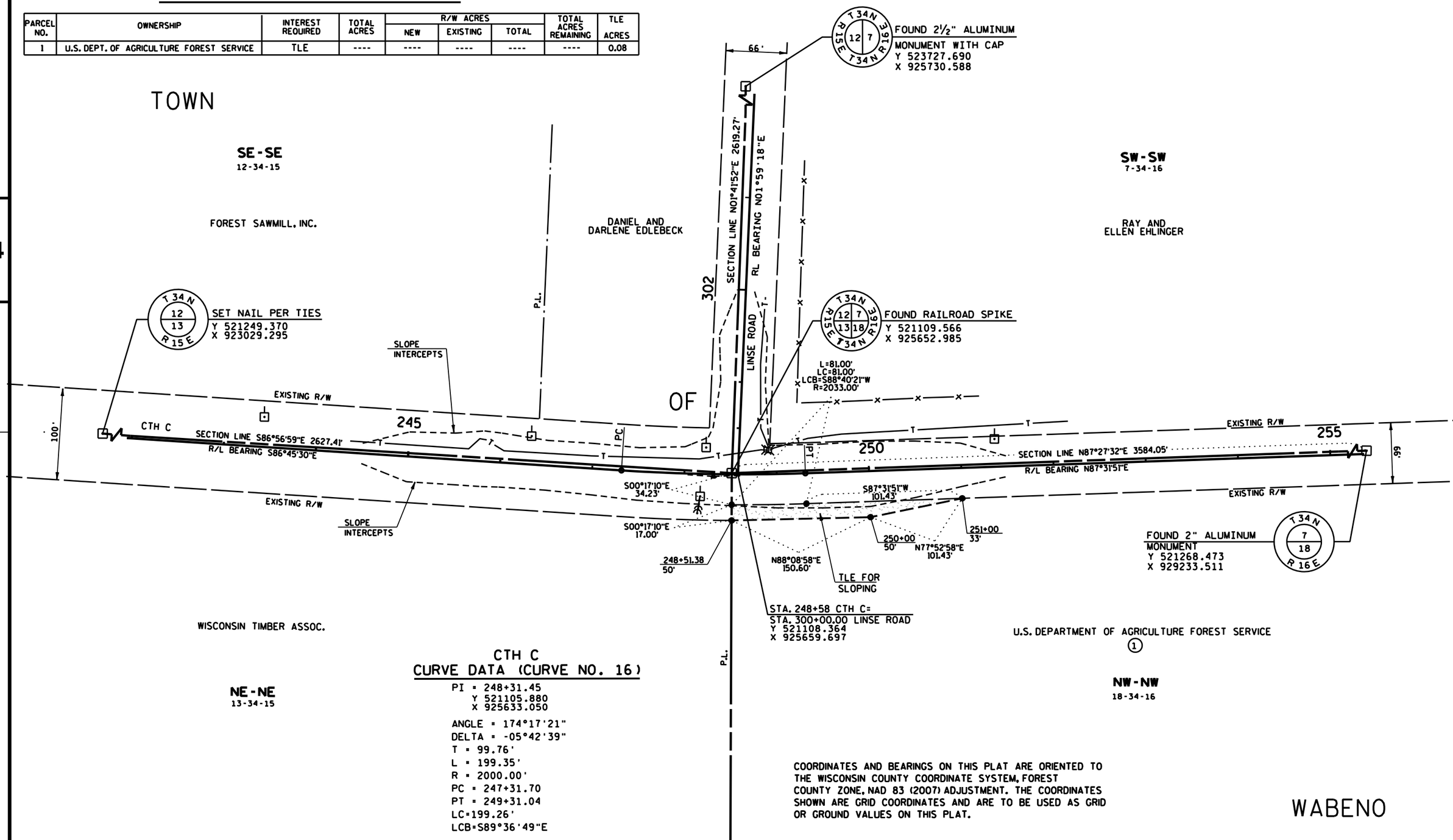

CTH C
CURVE DATA (CURVE NO. 16)

PI = 248+31.45
Y 521105.880
X 925633.050

ANGLE = 174°17'21"
DELTA = -05°42'39"
T = 99.76'
L = 199.35'
R = 2000.00'
PC = 247+31.70
PT = 249+31.04
LC=199.26'
LCB=S89°36'49"E

COORDINATES AND BEARINGS ON THIS PLAT ARE ORIENTED TO THE WISCONSIN COUNTY COORDINATE SYSTEM, FOREST COUNTY ZONE, NAD 83 (2007) ADJUSTMENT. THE COORDINATES SHOWN ARE GRID COORDINATES AND ARE TO BE USED AS GRID OR GROUND VALUES ON THIS PLAT.

REVISION DATE	DATE	SCALE, FEET	HWY: CTH C	STATE R/W PROJECT NUMBER 9330-00-00	PLAT SHEET 4.01	
	GRID FACTOR N/A	0 50' 100'	COUNTY: FOREST	CONSTRUCTION PROJECT NUMBER 9330-00-70	PS&E SHEET	E

FILE NAME : $$....designfile....$$ PLOT DATE : $$...plottingdate...$$ PLOT BY : $$...plotuser...$$ PLOT NAME : PLOT SCALE : $$.....plotscale.....$$ WISDOT/CADDS SHEET 75

PERMANENT SIGN LEGEND

- ○ SIGN-REMOVE AND REPLACE
- □ SIGN-REMOVE EXISTING
- ⬡ SIGN-PLACE NEW

BENCH MARKS			
NO.	STA.	DESCRIPTION	ELEV.
1	0+79	6" NAIL IN PP=45AA75-33' RT.	1540.66
2	6+14	6" NAIL IN PP=45BB67-23' LT.	1550.94
3	11+57	6" NAIL IN PP=45HH68-38' RT.	1565.94

N

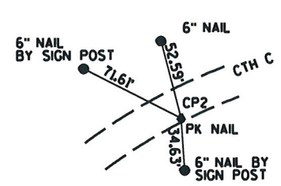

CP=2
STA. 1+30.61-14.09' RT.
Y=903625.540
X=522338.209

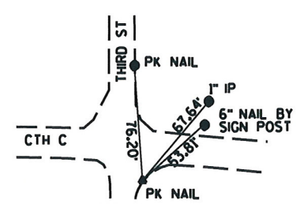

CP=14
STA. 11+91.73-26.22' RT.
Y=904671.298
X=522363.930

CTH C
CURVE DATA (CURVE NO. 2)

PI = 11+61.90
Y 522393.774
X 904644.134

ANGLE = 187°04'39"
DELTA = 07°04'39"
T = 46.38'
L = 92.64'
R = 750.00'
PC = 11+15.51
PT = 12+08.16
SE = N/A
RO = N/A
SE TRANSITION = N/A

PROJECT NO:9330-00-70	HWY:CTH C	COUNTY:FOREST	PLAN	SHEET 24	E

PERMANENT SIGN LEGEND

- ○ SIGN-REMOVE AND REPLACE
- □ SIGN-REMOVE EXISTING
- ⬡ SIGN-PLACE NEW

N

CTH C
CURVE DATA (CURVE NO. 6)

PI = 75+20.89
Y 523663.480
X 910173.300

ANGLE = 202°41'24"
DELTA = 22°41'24"
T = 130.41'
L = 257.41'
R = 650.00'
PC = 73+90.47
PT = 76+47.88
SE = 6.0%
RO = 133'
SE TRANSITION = 177'

CTH C
CURVE DATA (CURVE NO. 4)

PI = 54+08.11
Y 522014.620
X 908871.220

ANGLE = 132°52'54"
DELTA = -47°07'06"
T = 283.43'
L = 534.54'
R = 650.00'
PC = 51+24.68
PT = 56+59.22
SE = 6.0%
RO = 133'
SE TRANSITION = 177'

CTH C
CURVE DATA (CURVE NO. 3)

PI = 35+46.02
Y 522109.750
X 907011.400

ANGLE = 176°05'11"
DELTA = -03°54'49"
T = 208.75'
L = 417.33'
R = 6110.00'
PC = 33+37.27
PT = 37+54.61
SE = RC
RO = 48'
SE TRANSITION = 96'

Sta. 55+55
46 LF OF 28x20-INCH PAPCCS +
2 ENDWALLS INSTALLED

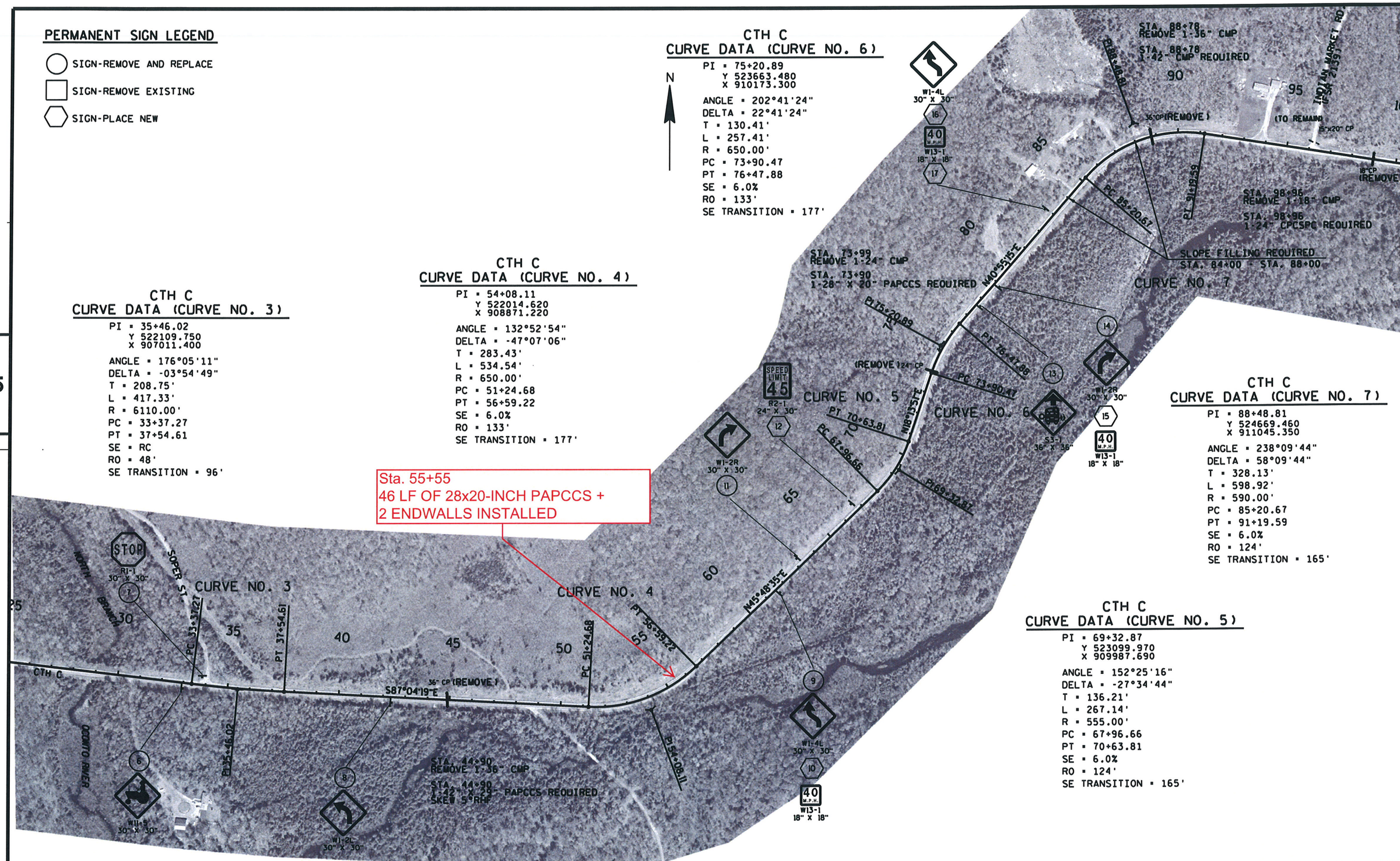

CTH C
CURVE DATA (CURVE NO. 7)

PI = 88+48.81
Y 524669.460
X 911045.350

ANGLE = 238°09'44"
DELTA = 58°09'44"
T = 328.13'
L = 598.92'
R = 590.00'
PC = 85+20.67
PT = 91+19.59
SE = 6.0%
RO = 124'
SE TRANSITION = 165'

CTH C
CURVE DATA (CURVE NO. 5)

PI = 69+32.87
Y 523099.970
X 909987.690

ANGLE = 152°25'16"
DELTA = -27°34'44"
T = 136.21'
L = 267.14'
R = 555.00'
PC = 67+96.66
PT = 70+63.81
SE = 6.0%
RO = 124'
SE TRANSITION = 165'

PROJECT NO:9330-00-70	HWY:CTH C	COUNTY:FOREST	PLAN	SHEET 25	E

BENCH MARKS			
NO.	STA.	DESCRIPTION	ELEV.
4	145+52	CHISELED X ON BOULDER-30.5' LT.	1450.47
5	147+79	CHISELED X ON BOULDER-31.2' LT.	1449.03

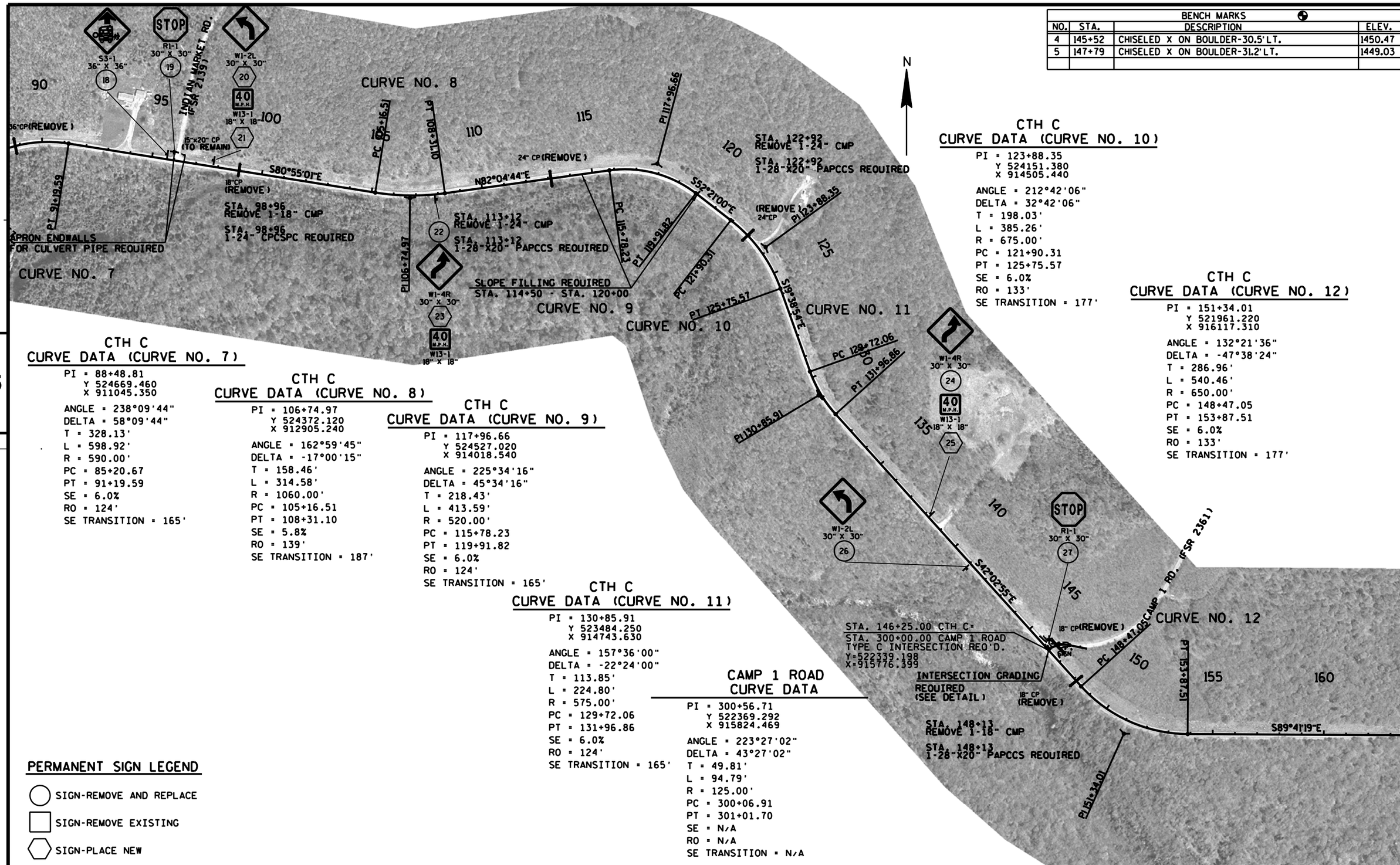

CTH C CURVE DATA (CURVE NO. 7)

PI = 88+48.81
Y 524669.460
X 911045.350

ANGLE = 238°09'44"
DELTA = 58°09'44"
T = 328.13'
L = 598.92'
R = 590.00'
PC = 85+20.67
PT = 91+19.59
SE = 6.0%
RO = 124'
SE TRANSITION = 165'

CTH C CURVE DATA (CURVE NO. 8)

PI = 106+74.97
Y 524372.120
X 912905.240

ANGLE = 162°59'45"
DELTA = -17°00'15"
T = 158.46'
L = 314.58'
R = 1060.00'
PC = 105+16.51
PT = 108+31.10
SE = 5.8%
RO = 139'
SE TRANSITION = 187'

CTH C CURVE DATA (CURVE NO. 9)

PI = 117+96.66
Y 524527.020
X 914018.540

ANGLE = 225°34'16"
DELTA = 45°34'16"
T = 218.43'
L = 413.59'
R = 520.00'
PC = 115+78.23
PT = 119+91.82
SE = 6.0%
RO = 124'
SE TRANSITION = 165'

CTH C CURVE DATA (CURVE NO. 10)

PI = 123+88.35
Y 524151.380
X 914505.440

ANGLE = 212°42'06"
DELTA = 32°42'06"
T = 198.03'
L = 385.26'
R = 675.00'
PC = 121+90.31
PT = 125+75.57
SE = 6.0%
RO = 133'
SE TRANSITION = 177'

CTH C CURVE DATA (CURVE NO. 11)

PI = 130+85.91
Y 523484.250
X 914743.630

ANGLE = 157°36'00"
DELTA = -22°24'00"
T = 113.85'
L = 224.80'
R = 575.00'
PC = 129+72.06
PT = 131+96.86
SE = 6.0%
RO = 124'
SE TRANSITION = 165'

CTH C CURVE DATA (CURVE NO. 12)

PI = 151+34.01
Y 521961.220
X 916117.310

ANGLE = 132°21'36"
DELTA = -47°38'24"
T = 286.96'
L = 540.46'
R = 650.00'
PC = 148+47.05
PT = 153+87.51
SE = 6.0%
RO = 133'
SE TRANSITION = 177'

CAMP 1 ROAD CURVE DATA

PI = 300+56.71
Y 522369.292
X 915824.469

ANGLE = 223°27'02"
DELTA = 43°27'02"
T = 49.81'
L = 94.79'
R = 125.00'
PC = 300+06.91
PT = 301+01.70
SE = N/A
RO = N/A
SE TRANSITION = N/A

PERMANENT SIGN LEGEND

- ○ SIGN-REMOVE AND REPLACE
- □ SIGN-REMOVE EXISTING
- ⬡ SIGN-PLACE NEW

PROJECT NO:9330-00-70	HWY:CTH C	COUNTY:FOREST	PLAN	SHEET 26	E

CTH C
CURVE DATA (CURVE NO. 12)

PI = 151+34.01
Y 521961.220
X 916117.310

ANGLE = 132°21'36"
DELTA = -47°38'24"
T = 286.96'
L = 540.46'
R = 650.00'
PC = 148+47.05
PT = 153+87.51
SE = 6.0%
RO = 133'
SE TRANSITION = 177'

CTH C
CURVE DATA (CURVE NO. 13)

PI = 167+78.50
Y 521952.100
X 917795.230

ANGLE = 174°53'06"
DELTA = -05°06'54"
T = 174.20'
L = 348.16'
R = 3900.00'
PC = 166+04.31
PT = 169+52.47
SE = 2.8%
RO = 67'
SE TRANSITION = 115'

N

CTH C
CURVE DATA (CURVE NO. 14)

PI = 186+04.30
Y 522105.010
X 919614.850

ANGLE = 219°46'57"
DELTA = 39°46'57"
T = 206.24'
L = 395.77'
R = 570.00'
PC = 183+98.07
PT = 187+93.84
SE = 6.0%
RO = 124'
SE TRANSITION = 165'

PERMANENT SIGN LEGEND

- SIGN-REMOVE AND REPLACE
- SIGN-REMOVE EXISTING
- SIGN-PLACE NEW

CTH C
CURVE DATA (CURVE NO. 15)

PI = 198+36.98
Y 521388.770
X 920638.550

ANGLE = 148°15'46"
DELTA = -31°44'14"
T = 156.35'
L = 304.65'
R = 550.00'
PC = 196+80.64
PT = 199+85.29
SE = 6.0%
RO = 124'
SE TRANSITION = 165'

Existing sign left in place.

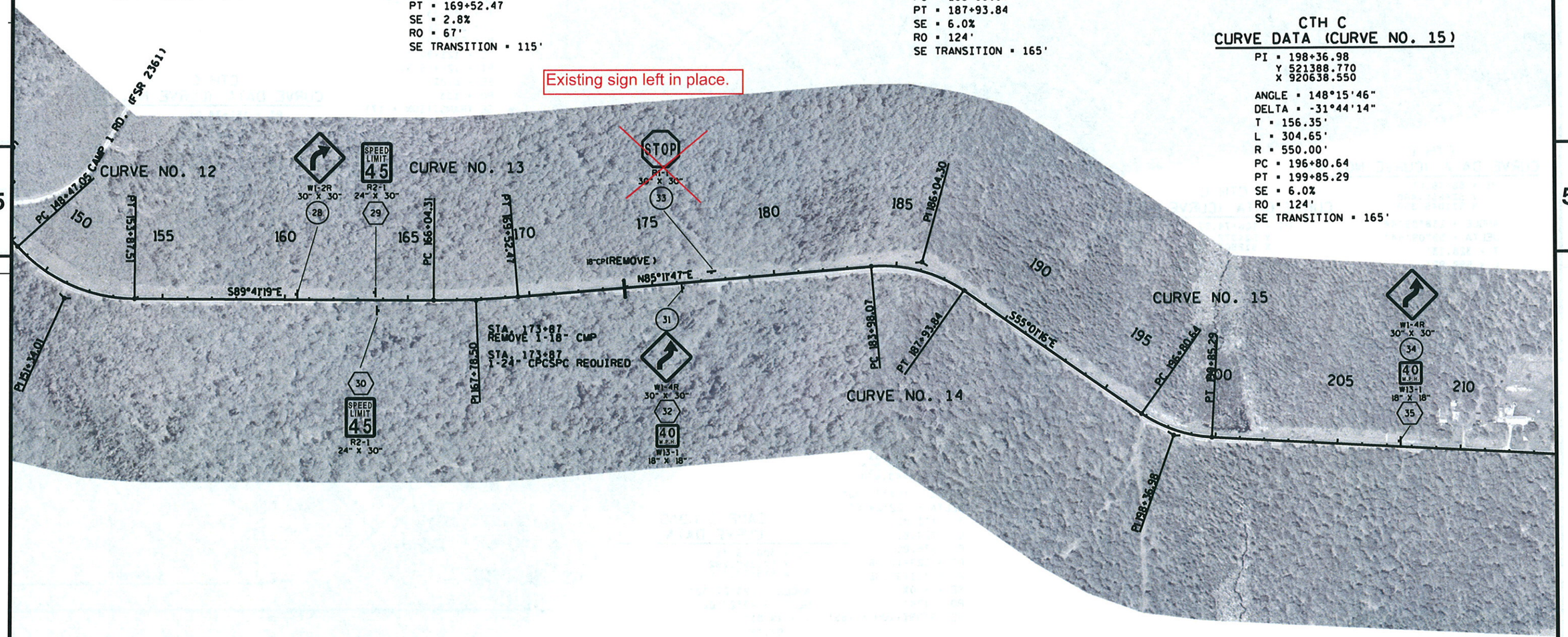

PROJECT NO:9330-00-70	HWY:CTH C	COUNTY:FOREST	PLAN	SHEET 27	E

PERMANENT SIGN LEGEND

- ○ SIGN-REMOVE AND REPLACE
- □ SIGN-REMOVE EXISTING
- ⬡ SIGN-PLACE NEW

N

BENCH MARKS			
NO.	STA.	DESCRIPTION	ELEV.
6	243+42	6" NAIL IN PP=3415 12R9-32'LT.	1368.59
7	248+17	6" NAIL IN PP=3415 13E2-24'RT.	1366.87
8	251+37	6" NAIL IN PP=3416 7L23-30'LT.	1378.01

CTH C
CURVE DATA (CURVE NO. 16)

PI = 248+31.45
Y 521105.880
X 925633.050

ANGLE = 174°17'21"
DELTA = -05°42'39"
T = 99.76'
L = 199.35'
R = 2000.00'
PC = 247+31.70
PT = 249+31.04
SE = 4.4%
RO = 106'
SE TRANSITION = 154'

5

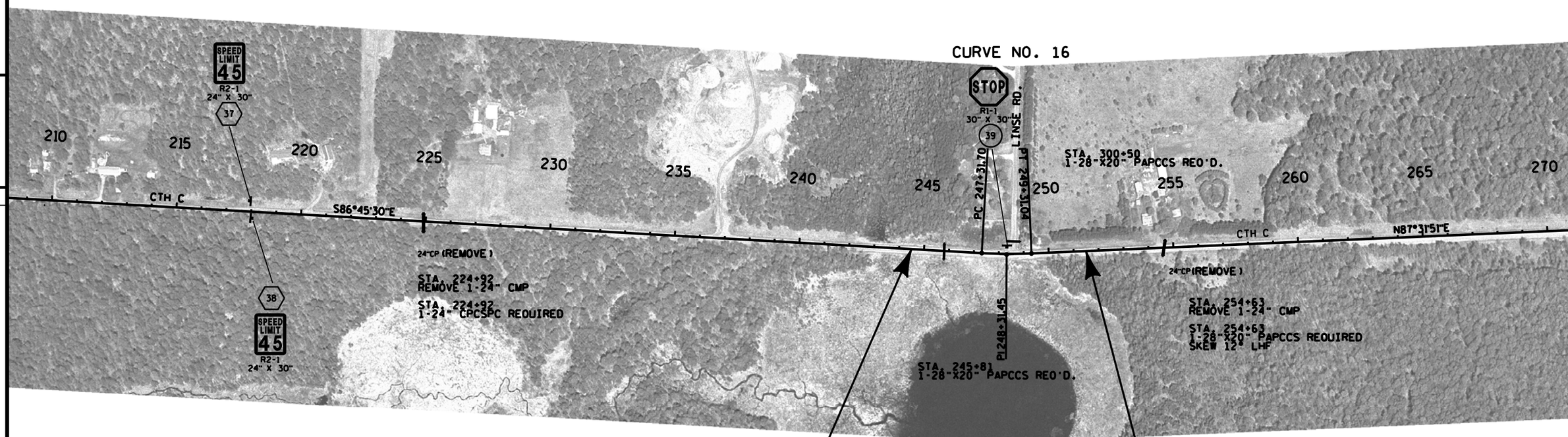

5

END PULVERIZE AND RELAY
BEGIN RECONSTRUCTION
STA. 244+50
Y 521127.451
X 925252.209
(SEE PLAN AND PROFILE SHEET)

END RECONSTRUCTION
BEGIN PULVERIZE AND RELAY
STA. 251+50
Y 521119.610
X 925951.468

PROJECT NO:9330-00-70	HWY:CTH C	COUNTY:FOREST	PLAN	SHEET	E

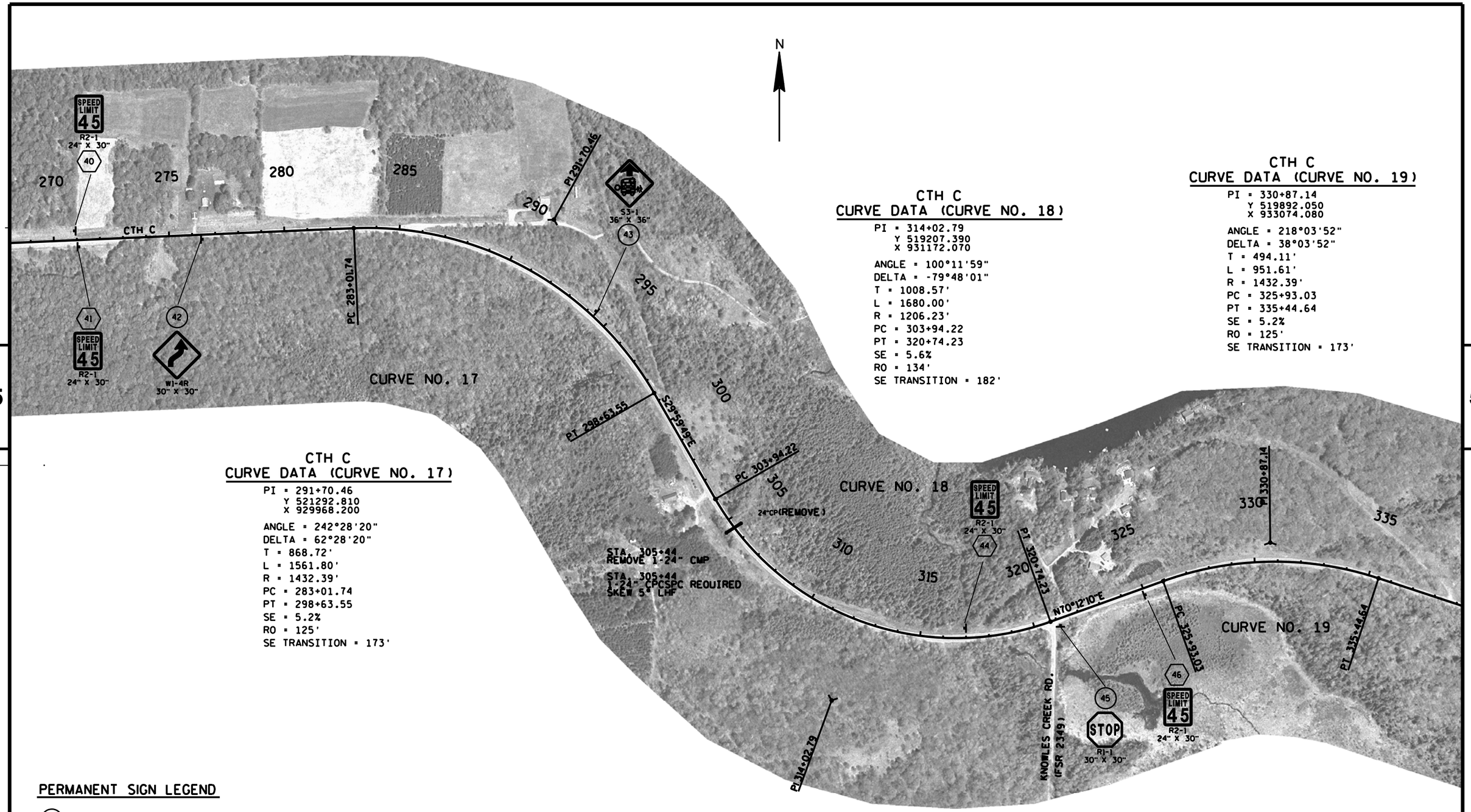

CTH C
CURVE DATA (CURVE NO. 17)

PI = 291+70.46
Y 521292.810
X 929968.200

ANGLE = 242°28'20"
DELTA = 62°28'20"
T = 868.72'
L = 1561.80'
R = 1432.39'
PC = 283+01.74
PT = 298+63.55
SE = 5.2%
RO = 125'
SE TRANSITION = 173'

CTH C
CURVE DATA (CURVE NO. 18)

PI = 314+02.79
Y 519207.390
X 931172.070

ANGLE = 100°11'59"
DELTA = -79°48'01"
T = 1008.57'
L = 1680.00'
R = 1206.23'
PC = 303+94.22
PT = 320+74.23
SE = 5.6%
RO = 134'
SE TRANSITION = 182'

CTH C
CURVE DATA (CURVE NO. 19)

PI = 330+87.14
Y 519892.050
X 933074.080

ANGLE = 218°03'52"
DELTA = 38°03'52"
T = 494.11'
L = 951.61'
R = 1432.39'
PC = 325+93.03
PT = 335+44.64
SE = 5.2%
RO = 125'
SE TRANSITION = 173'

PERMANENT SIGN LEGEND

- ○ SIGN-REMOVE AND REPLACE
- □ SIGN-REMOVE EXISTING
- ⬡ SIGN-PLACE NEW

PROJECT NO:9330-00-70	HWY:CTH C	COUNTY:FOREST	PLAN	SHEET	E

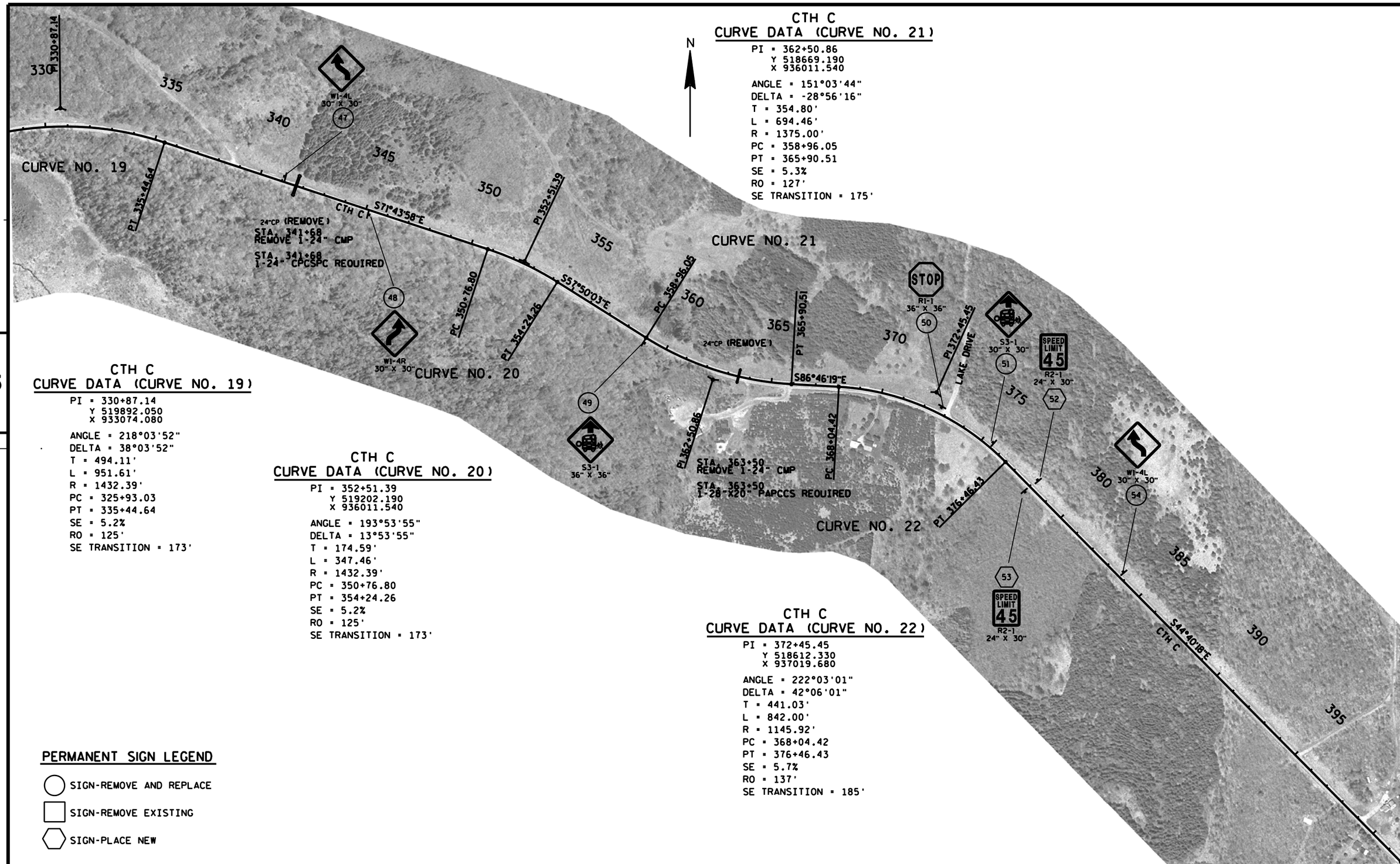

CTH C
CURVE DATA (CURVE NO. 19)

PI = 330+87.14
Y 519892.050
X 933074.080

ANGLE = 218°03'52"
DELTA = 38°03'52"
T = 494.11'
L = 951.61'
R = 1432.39'
PC = 325+93.03
PT = 335+44.64
SE = 5.2%
RO = 125'
SE TRANSITION = 173'

CTH C
CURVE DATA (CURVE NO. 20)

PI = 352+51.39
Y 519202.190
X 936011.540

ANGLE = 193°53'55"
DELTA = 13°53'55"
T = 174.59'
L = 347.46'
R = 1432.39'
PC = 350+76.80
PT = 354+24.26
SE = 5.2%
RO = 125'
SE TRANSITION = 173'

CTH C
CURVE DATA (CURVE NO. 21)

PI = 362+50.86
Y 518669.190
X 936011.540

ANGLE = 151°03'44"
DELTA = -28°56'16"
T = 354.80'
L = 694.46'
R = 1375.00'
PC = 358+96.05
PT = 365+90.51
SE = 5.3%
RO = 127'
SE TRANSITION = 175'

CTH C
CURVE DATA (CURVE NO. 22)

PI = 372+45.45
Y 518612.330
X 937019.680

ANGLE = 222°03'01"
DELTA = 42°06'01"
T = 441.03'
L = 842.00'
R = 1145.92'
PC = 368+04.42
PT = 376+46.43
SE = 5.7%
RO = 137'
SE TRANSITION = 185'

PERMANENT SIGN LEGEND

- ○ SIGN-REMOVE AND REPLACE
- □ SIGN-REMOVE EXISTING
- ⬡ SIGN-PLACE NEW

PROJECT NO:9330-00-70	HWY:CTH C	COUNTY:FOREST	PLAN	SHEET 30	E

CTH C
CURVE DATA (CURVE NO. 23)

PI = 407+69.18
Y 516077.960
X 939525.170

ANGLE = 135°15'00"
DELTA = -44°45'00"
T = 589.66'
L = 1118.75'
R = 1432.39'
PC = 401+79.52
PT = 412+98.27
SE = 5.2%
RO = 125'
SE TRANSITION = 173'

CTH C
CURVE DATA (CURVE NO. 25)

PI = 447+31.59
Y 515957.220
X 943546.000

ANGLE = 176°44'12"
DELTA = -03°15'48"
T = 199.40'
L = 398.70'
R = 7000.00'
PC = 445+32.19
PT = 449+30.88
SE = RC
RO = 48'
SE TRANSITION = 96'

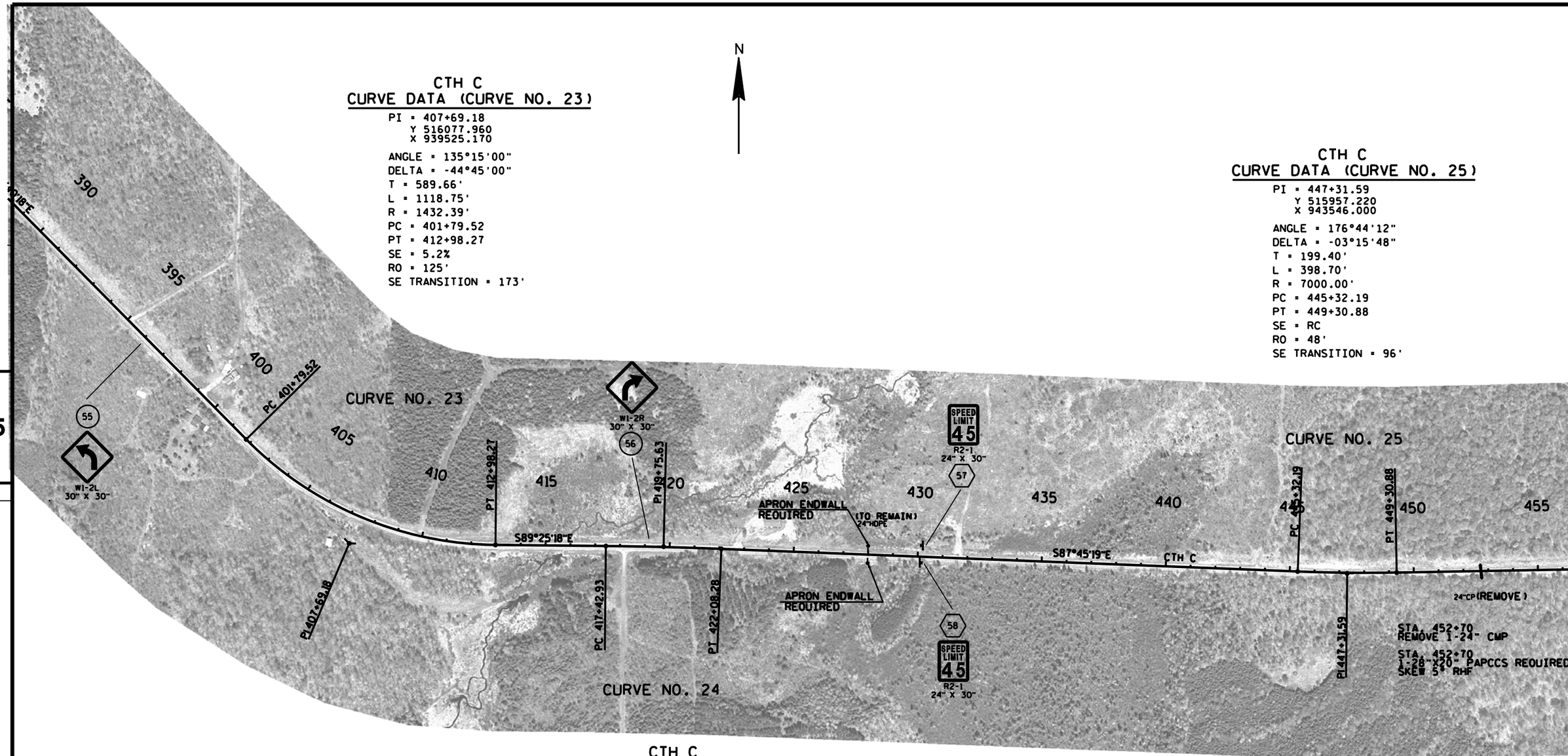

CTH C
CURVE DATA (CURVE NO. 24)

PI = 419+75.63
Y 516065.170
X 940792.120

ANGLE = 181°39'59"
DELTA = 01°39'59"
T = 232.69'
L = 465.35'
R = 16000.00'
PC = 417+42.93
PT = 422+08.28
SE = NC
RO = 0'
SE TRANSITION = 0'

PERMANENT SIGN LEGEND

- SIGN-REMOVE AND REPLACE
- SIGN-REMOVE EXISTING
- SIGN-PLACE NEW

PROJECT NO:9330-00-70	HWY:CTH C	COUNTY:FOREST	PLAN	SHEET	E

CTH C
CURVE DATA (CURVE NO. 26)

PI = 461+36.71
Y 515982.200
X 944951.010

ANGLE = 180°33'26"
DELTA = 00°33'26"
T = 97.27'
L = 194.53'
R = 20000.00'
PC = 460+39.45
PT = 462+33.98
SE = NC
RO = 0'
SE TRANSITION = 0'

N

CTH C
CURVE DATA (CURVE NO. 27)

PI = 487+27.80
Y 516003.060
X 947542.020

ANGLE = 181°41'26"
DELTA = 01°41'26"
T = 140.16'
L = 280.30'
R = 9500.00'
PC = 485+87.65
PT = 488+67.94
SE = NC
RO = 0'
SE TRANSITION = 0'

CTH C
CURVE DATA (CURVE NO. 28)

PI = 509+91.40
Y 515954.500
X 949805.110

ANGLE = 195°35'12"
DELTA = 15°35'12"
T = 196.04'
L = 389.67'
R = 1432.39'
PC = 507+95.35
PT = 511+85.02
SE = 5.2%
RO = 125'
SE TRANSITION = 173'

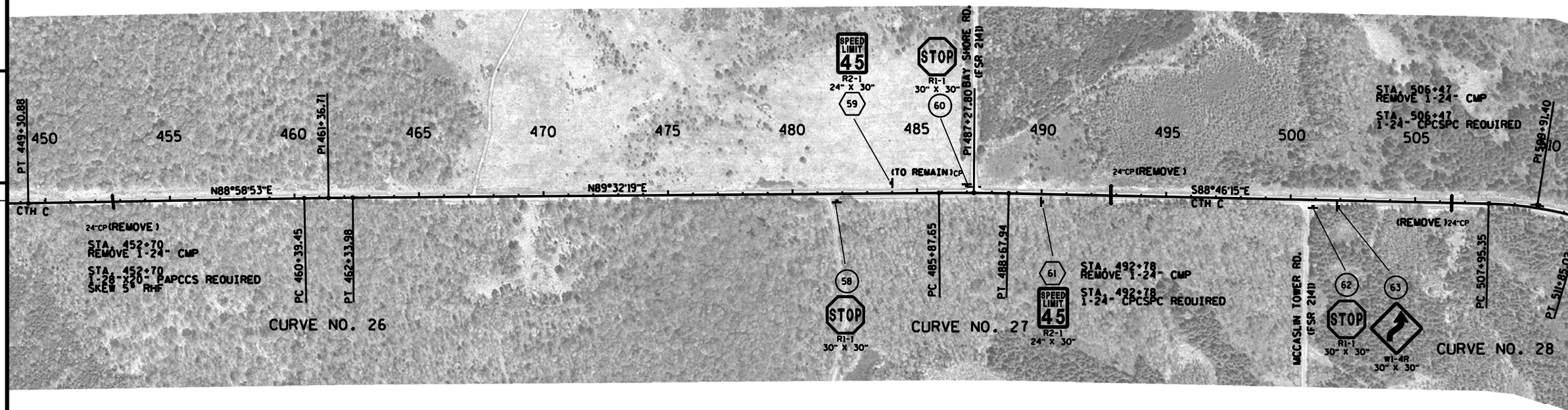

PERMANENT SIGN LEGEND

- ○ SIGN-REMOVE AND REPLACE
- □ SIGN-REMOVE EXISTING
- ⬡ SIGN-PLACE NEW

PROJECT NO:9330-00-70	HWY:CTH C	COUNTY:FOREST	PLAN	SHEET	E

N

CTH C
CURVE DATA (CURVE NO. 29)

PI = 520+07.00
Y 515659.990
X 950779.600

ANGLE = 164°44'15"
DELTA = -15°15'45"
T = 255.89'
L = 508.74'
R = 1909.85'
PC = 517+51.11
PT = 522+59.85
SE = 4.5%
RO = 108'
SE TRANSITION = 156'

CTH C
CURVE DATA (CURVE NO. 30)

PI = 537+29.57
Y 515613.210
X 952504.570

ANGLE = 180°38'00"
DELTA = 00°38'00"
T = 110.52'
L = 221.04'
R = 20000.00'
PC = 536+19.05
PT = 538+40.09
SE = NC
RO = 0'
SE TRANSITION = 0'

CTH C
CURVE DATA (CURVE NO. 31)

PI = 552+50.98
Y 515555.160
X 954024.870

ANGLE = 132°54'00"
DELTA = -47°06'00"
T = 499.45'
L = 942.00'
R = 1145.92'
PC = 547+51.53
PT = 556+93.53
SE = 5.7%
RO = 137'
SE TRANSITION = 185'

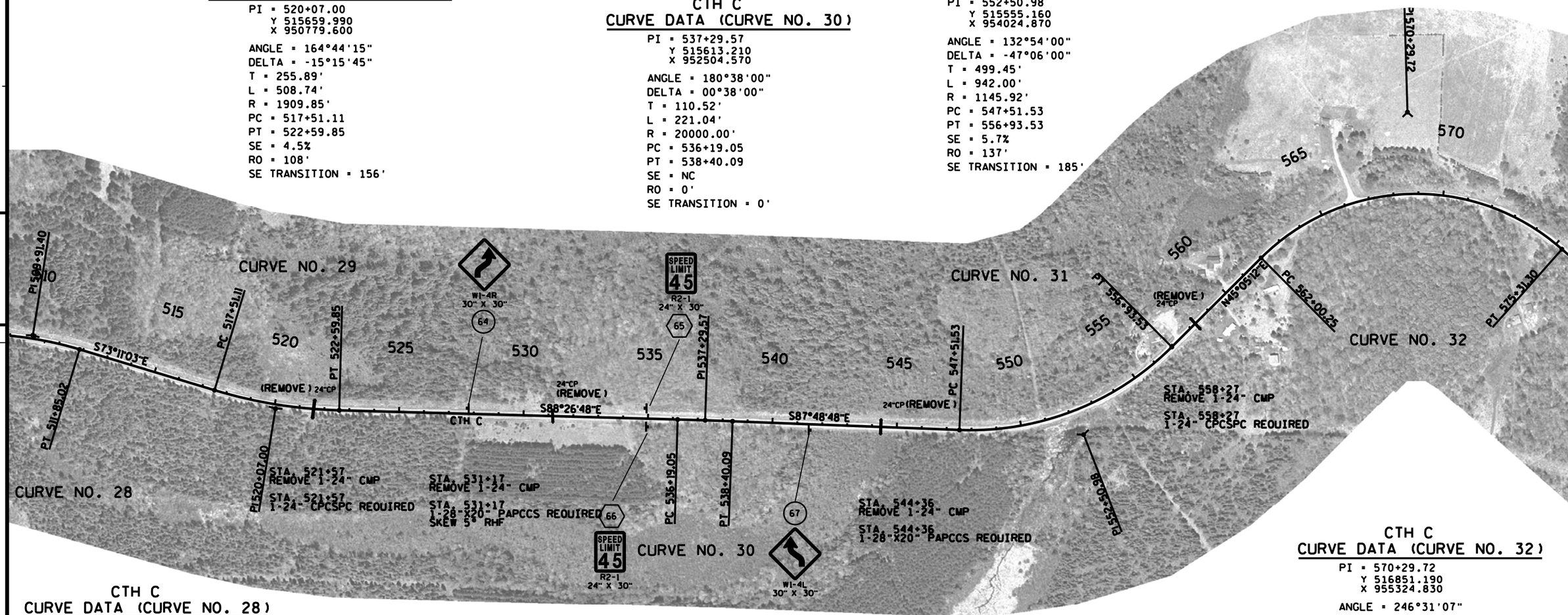

CTH C
CURVE DATA (CURVE NO. 28)

PI = 509+91.40
Y 515954.500
X 949805.110

ANGLE = 195°35'12"
DELTA = 15°35'12"
T = 196.04'
L = 389.67'
R = 1432.39'
PC = 507+95.35
PT = 511+85.02
SE = 5.2%
RO = 125'
SE TRANSITION = 173'

PERMANENT SIGN LEGEND

- SIGN-REMOVE AND REPLACE
- SIGN-REMOVE EXISTING
- SIGN-PLACE NEW

CTH C
CURVE DATA (CURVE NO. 32)

PI = 570+29.72
Y 516851.190
X 955324.830

ANGLE = 246°31'07"
DELTA = 86°31'07"
T = 829.48'
L = 1331.05'
R = 881.47'
PC = 562+00.25
PT = 575+31.30
SE = 6.0%
RO = 144'
SE TRANSITION = 192'

PROJECT NO:9330-00-70	HWY:CTH C	COUNTY:FOREST	PLAN	SHEET	E

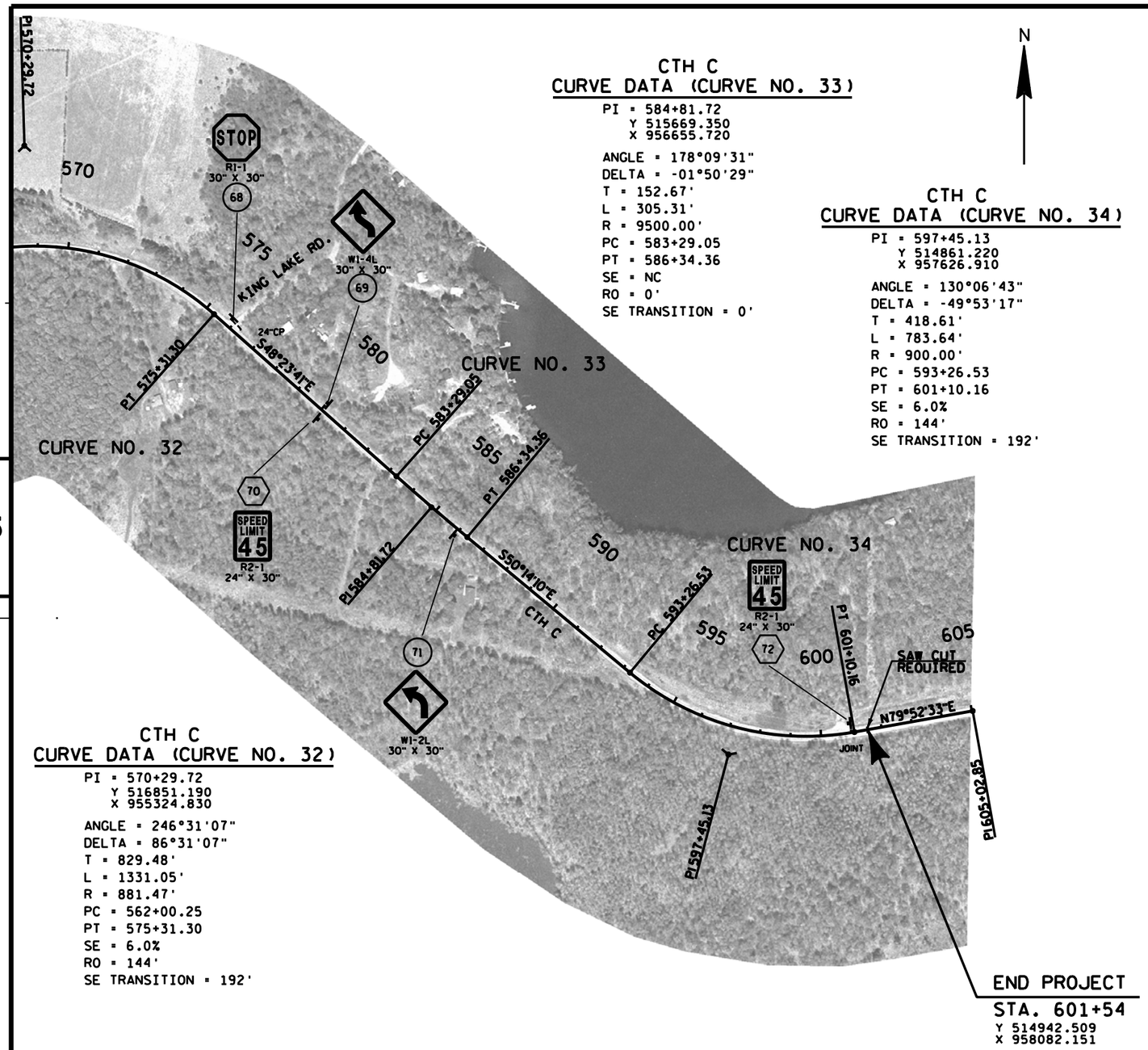

N

CTH C
CURVE DATA (CURVE NO. 33)

PI = 584+81.72
Y 515669.350
X 956655.720

ANGLE = 178°09'31"
DELTA = -01°50'29"
T = 152.67'
L = 305.31'
R = 9500.00'
PC = 583+29.05
PT = 586+34.36
SE = NC
RO = 0'
SE TRANSITION = 0'

CTH C
CURVE DATA (CURVE NO. 34)

PI = 597+45.13
Y 514861.220
X 957626.910

ANGLE = 130°06'43"
DELTA = -49°53'17"
T = 418.61'
L = 783.64'
R = 900.00'
PC = 593+26.53
PT = 601+10.16
SE = 6.0%
RO = 144'
SE TRANSITION = 192'

CTH C
CURVE DATA (CURVE NO. 32)

PI = 570+29.72
Y 516851.190
X 955324.830

ANGLE = 246°31'07"
DELTA = 86°31'07"
T = 829.48'
L = 1331.05'
R = 881.47'
PC = 562+00.25
PT = 575+31.30
SE = 6.0%
RO = 144'
SE TRANSITION = 192'

PERMANENT SIGN LEGEND

- ○ SIGN-REMOVE AND REPLACE
- □ SIGN-REMOVE EXISTING
- ⬡ SIGN-PLACE NEW

5

5

PROJECT NO:9330-00-70	HWY:CTH C	COUNTY:FOREST	PLAN	SHEET 34	E

BENCH MARKS			
NO.	STA.	DESCRIPTION	ELEV.
6	243+42	6" SPIKE IN PP#3415 12R9-32' LT.	1368.59
7	248+17	6" SPIKE IN PP#3415 13E2-24' RT.	1366.87
8	251+37	6" SPIKE IN PP#3416 7L23-30' LT.	1378.01

EROSION CONTROL LEGEND

- EROSION MAT URBAN CLASS I TYPE B
- SILT FENCE (INSTALL 1' FROM SLOPE INTERCEPTS)
- CULVERT PIPE DITCH CHECKS
- ROCK BAGS

CTH C CURVE DATA (CURVE NO. 16)

PI = 248+31.45
Y 521105.880
X 925633.050

ANGLE = 174°17'21"
DELTA = -05°42'39"
T = 99.76'
L = 199.35'
R = 2000.00'
PC = 247+31.70
PT = 249+31.04
SE = 4.4%
RO = 106'
SE TRANSITION = 154'

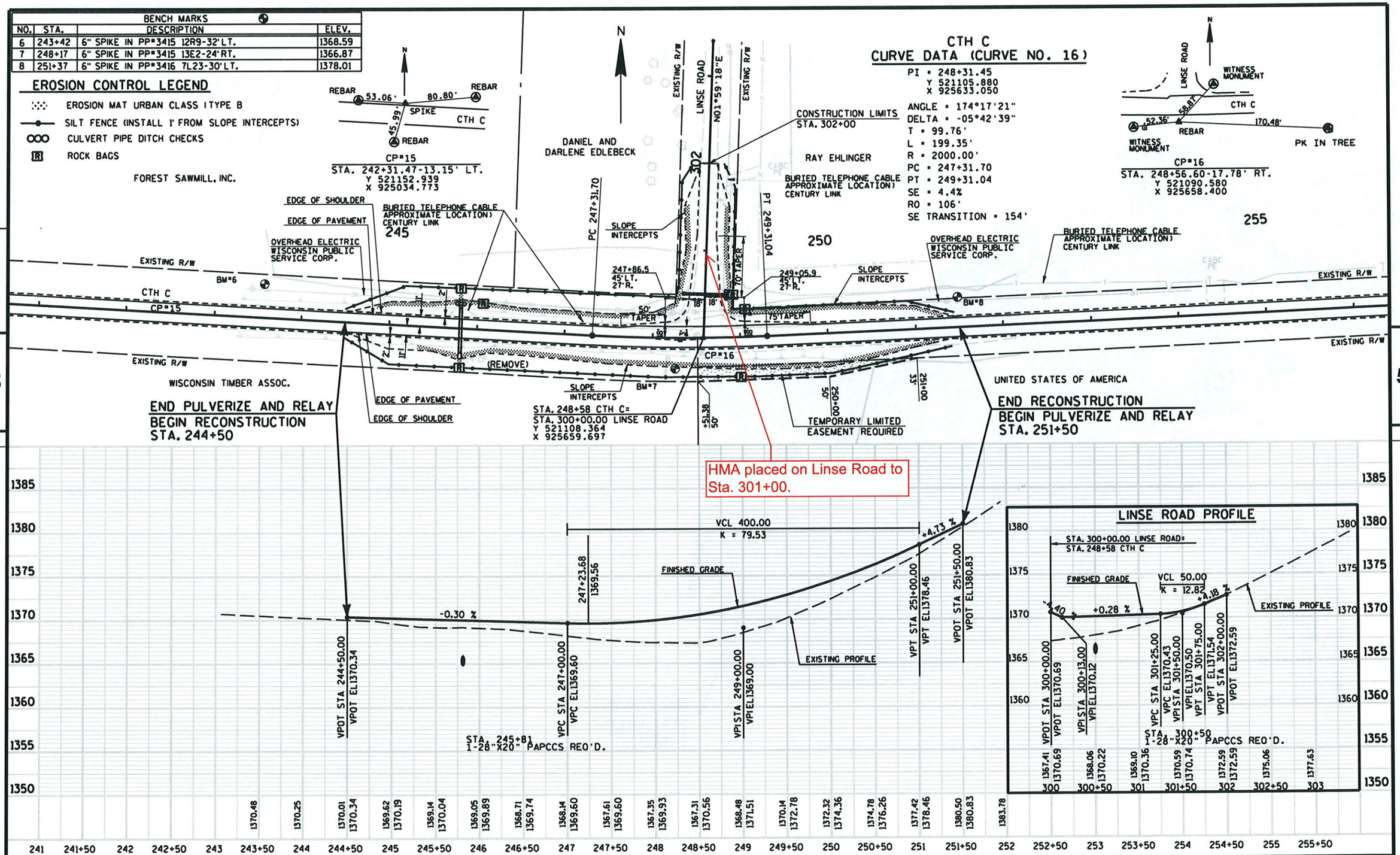

PROJECT NO: 9330-00-70	HWY: CTH C	COUNTY: FOREST	PLAN AND PROFILE	SHEET 35	E

Standard Detail Drawing List

08E9-6	SILT FENCE
08F1-11	APRON ENDWALLS FOR CULVERT PIPE
08F2-1	APRON ENDWALLS FOR PIPE ARCH AND ELLIPTICAL PIPE
15A3-1	MARKER POSTS, FLEXIBLE, FOR CULVERT END
15C2-4A	BARRICADES AND SIGNS FOR MAINLINE CLOSURES
15C2-4B	BARRICADES AND SIGNS FOR MAINLINE CLOSURES
15C3-1	BARRICADES AND SIGNS FOR SIDEROAD CLOSURES
15C4-1	TRAFFIC CONTROL, ADVANCE WARNING SIGNS 45 M.P.H. OR GREATER TWO-WAY UNDIVIDED ROAD OPEN TO TRAFFIC
15C8-13A	PAVEMENT MARKING (MAINLINE)
15C12-3	TRAFFIC CONTROL FOR LANE CLOSURE (SUITABLE FOR MOVING OPERATIONS)
16A1-6	LANDMARK REFERENCE MONUMENTS AND COVERS

6

6

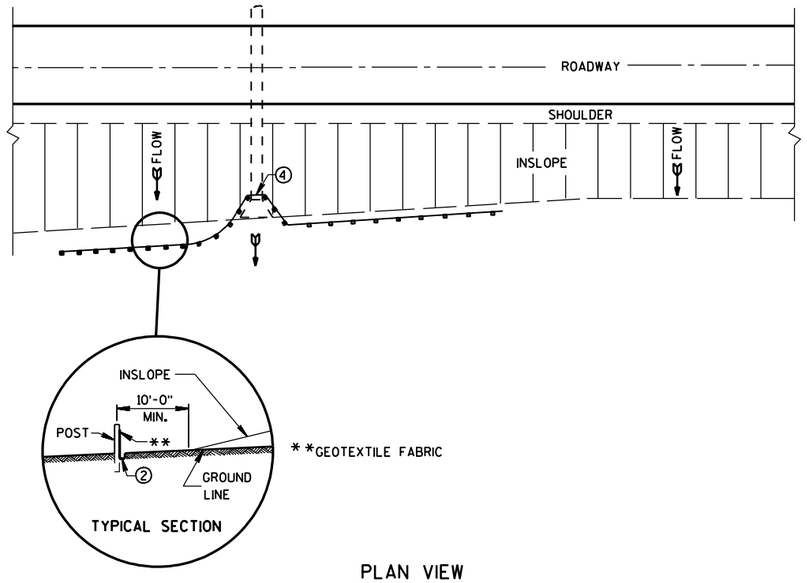

PLAN VIEW

TYPICAL APPLICATION OF SILT FENCE

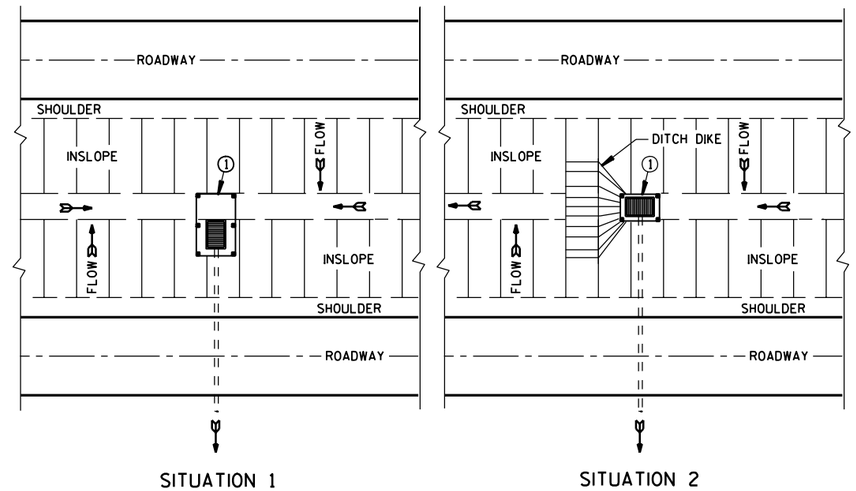

PLAN VIEW

SILT FENCE AT MEDIAN SURFACE DRAINS

GENERAL NOTES

DETAILS OF CONSTRUCTION NOT SHOWN ON THIS DRAWING SHALL CONFORM TO THE PERTINENT REQUIREMENTS OF THE STANDARD SPECIFICATIONS AND APPLICABLE SPECIAL PROVISIONS.

① HORIZONTAL BRACE REQUIRED WITH 2" X 4" WOODEN FRAME OR EQUIVALENT AT TOP OF POSTS.

② FOR MANUAL INSTALLATIONS THE TRENCH SHALL BE A MINIMUM OF 4" WIDE & 6" DEEP TO BURY AND ANCHOR THE GEOTEXTILE FABRIC. FOLD MATERIAL TO FIT TRENCH AND BACKFILL & COMPACT TRENCH WITH EXCAVATED SOIL.

③ WOOD POSTS SHALL BE A MINIMUM SIZE OF 1 1/8" X 1 1/8" OF OAK OR HICKORY.

④ SILT FENCE TO EXTEND ACROSS THE TOP OF THE PIPE.

⑤ CONSTRUCT SILT FENCE FROM A CONTINUOUS ROLL IF POSSIBLE BY CUTTING LENGTHS TO AVOID JOINTS. IF A JOINT IS NECESSARY USE ONE OF THE FOLLOWING TWO METHODS; A) OVERLAP THE END POSTS AND TWIST, OR ROTATE, AT LEAST 180 DEGREES, B) HOOK THE END OF EACH SILT FENCE LENGTH.

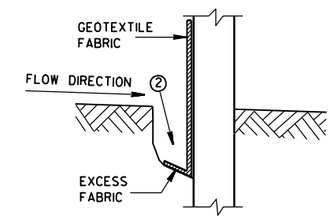

TRENCH DETAIL

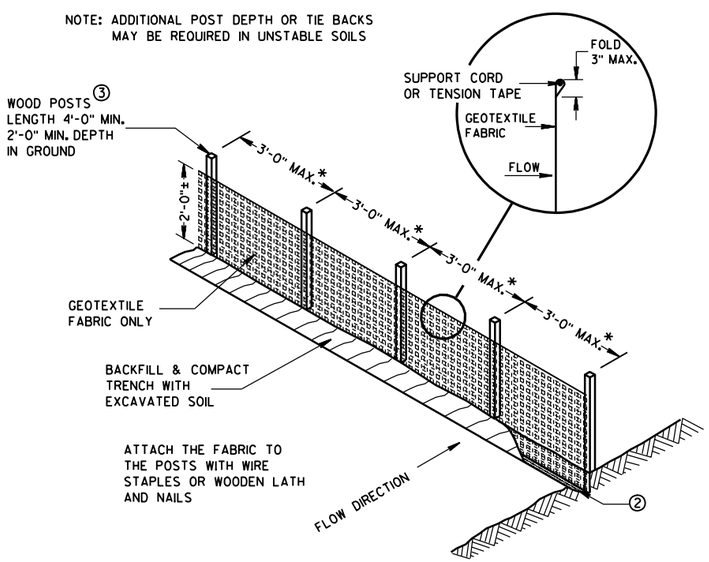

SILT FENCE

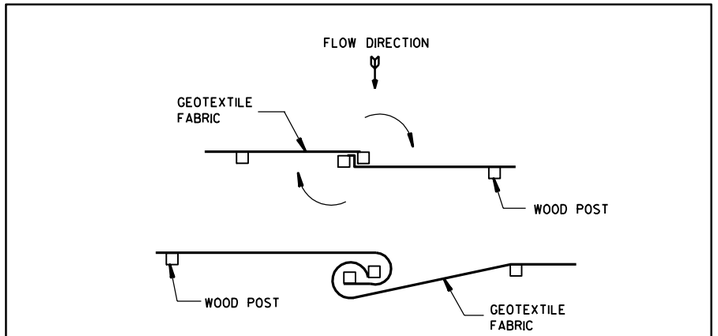

TWIST METHOD

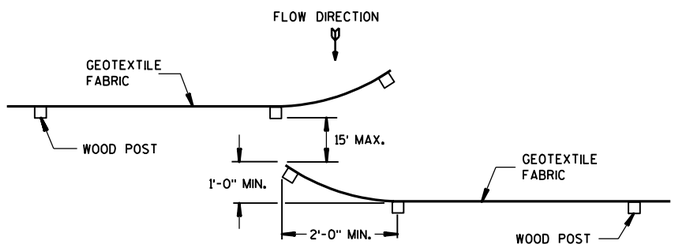

HOOK METHOD

JOINING TWO LENGTHS OF SILT FENCE ⑤

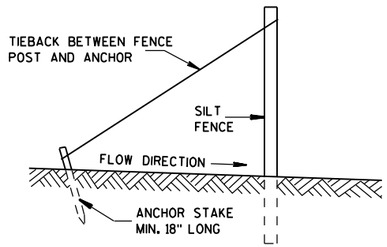

SILT FENCE TIE BACK

(WHEN REQUIRED BY THE ENGINEER)

6

SILT FENCE

STATE OF WISCONSIN
DEPARTMENT OF TRANSPORTATION

APPROVED
4-29-05
DATE
FHWA

CHIEF ROADWAY DEVELOPMENT ENGINEER

S.D.D. 8 E 9-6

S.D.D. 8 E 9-6

METAL APRON ENDWALLS

PIPE DIA. (IN.)	MIN. THICK. (inches) STEEL	MIN. THICK. (inches) ALUM.	DIMENSIONS (inches) A (±1")	B (MAX.)	H (±1")	L (±1 1/2")	L1 ①	L2 ①	W (±2")	APPROX. SLOPE	BODY
12	.064	.060	6	6	6	21	12	17 1/2	24	2 1/2 to 1	1 Pc.
15	.064	.060	7	8	6	26	14	21 3/4	30	2 1/2 to 1	1 Pc.
18	.064	.060	8	10	6	31	15	28 1/4	36	2 1/2 to 1	1 Pc.
21	.064	.060	9	12	6	36	18	29 5/8	42	2 1/2 to 1	1 Pc.
24	.064	.075	10	13	6	41	18	37 1/4	48	2 1/2 to 1	1 Pc.
30	.079	.075	12	16	8	51	18	52 1/4	60	2 1/2 to 1	1 Pc.
36	.079	.105	14	19	9	60	24	59 3/4	72	2 1/2 to 1	2 Pc.
42	.109	.105	16	22	11	69	24	75 5/8	84	2 1/2 to 1	2 Pc.
48	.109	.105	18	27	12	78	24	81	90	2 1/4 to 1	3 Pc.
54	.109	.105	18	30	12	84	30	85 1/2	102	2 1/4 to 1	3 Pc.
60	.109×	.105×	18	33	12	87	—	—	114	2 to 1	3 Pc.
66	.109×	.105×	18	36	12	87	—	—	120	2 to 1	3 Pc.
72	.109×	.105×	18	39	12	87	—	—	126	2 to 1	3 Pc.
78	.109×	.105×	18	42	12	87	—	—	132	1 1/2 to 1	3 Pc.
84	.109×	.105×	18	45	12	87	—	—	138	1 1/2 to 1	3 Pc.
90	.109×	.105×	18	37	12	87	—	—	144	1 1/2 to 1	3 Pc.
96	.109×	.105×	18	35	12	87	—	—	150	1 1/2 to 1	3 Pc.

× EXCEPT CENTER PANEL
SEE GENERAL NOTES

REINFORCED CONCRETE APRON ENDWALLS

PIPE DIA. (IN.)	DIMENSIONS (inches) T	A	B	C	D	E	G	APPROX. SLOPE
12	2	4	24	48 7/8	72 7/8	24	2	3 to 1
15	2 1/4	6	27	46	73	30	2 1/4	3 to 1
18	2 1/2	9	27	46	73	36	2 1/2	3 to 1
21	2 3/4	9	36	37 1/2	73 1/2	42	2 3/4	3 to 1
24	3	9 1/2	43 1/2	30	73 1/2	48	3	3 to 1
27	3 1/4	10 1/2	49 1/2	24	73 1/2	54	3 1/4	3 to 1
30	3 1/2	12	54	19 3/4	73 1/2	60	3 1/2	3 to 1
36	4	15	63	34 3/4	97 3/4	72	4	3 to 1
42	4 1/2	21	63	35	98	78	4 1/2	3 to 1
48	5	24	72	26	98	84	5	3 to 1
54	5 1/2	27	65	* 33 1/4-35	* 98 1/4- ** 100	90	5 1/2	2 2/5 to 1
60	6	* 30-35 **	60	39	99	96	5	2 to 1
66	6 1/2	* 24-30 **	* 72-78 **	* 21-27 **	99	102	5 1/2	2 to 1
72	7	* 24-36 **	78	21	99	108	6	2 to 1
78	7 1/2	* 24-36 **	78	21	99	114	6 1/2	2 to 1
84	8	36	90 1/2	21	111 1/2	120	6 1/2	1 1/2 to 1
90	8 1/2	41	87 1/2	24	111 1/2	132	6 1/2	1 1/2 to 1

*MINIMUM
**MAXIMUM

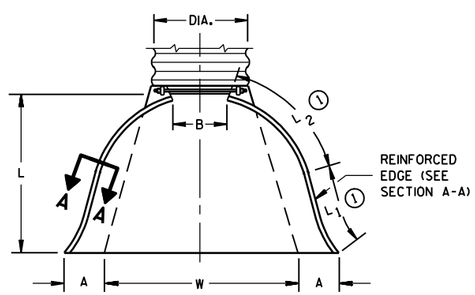

PLAN VIEW

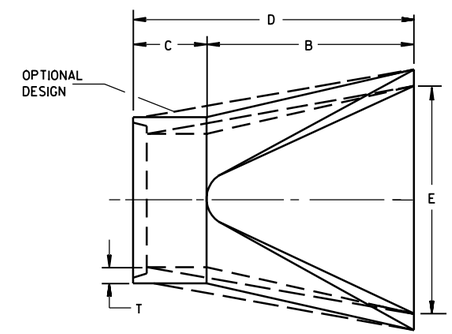

PLAN

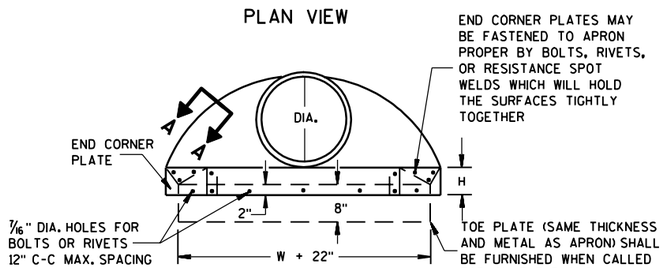

END VIEW

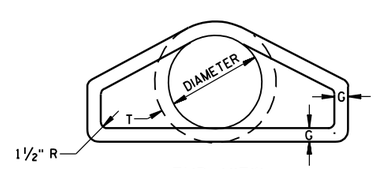

END VIEW

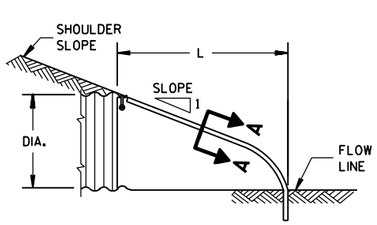

SIDE ELEVATION

METAL ENDWALLS

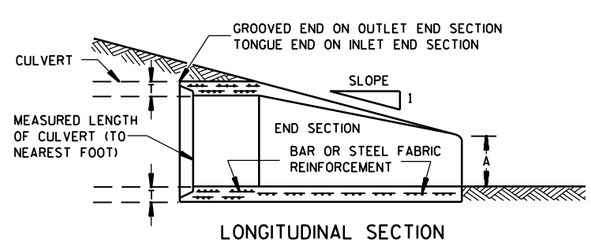

LONGITUDINAL SECTION

CONCRETE ENDWALLS

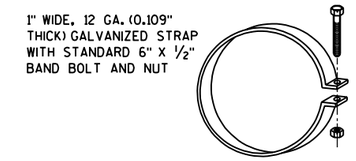

ALTERNATE FOR TYPE 1 CONNECTION

END SECTION CONNECTOR STRAP

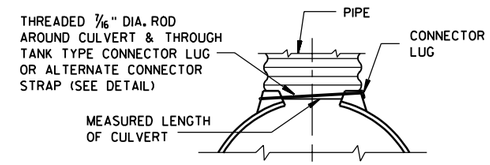

TYPE 1
FOR 12" THRU 24" CORR. PIPE

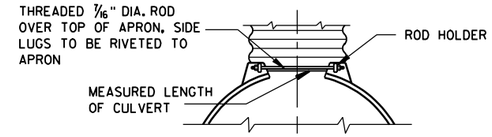

TYPE 2
FOR 30" THRU 96" CORR. PIPE

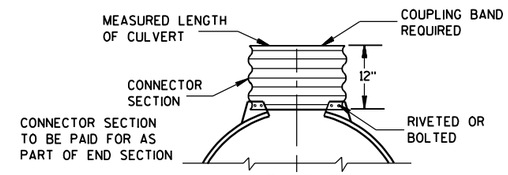

TYPE 3
FOR 42" THRU 96" CORR. PIPE

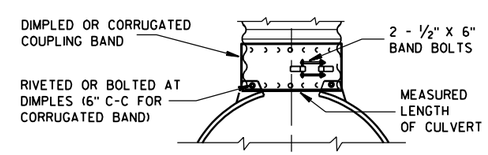

TYPE 5
ALTERNATE FOR:
ALL SIZES CORRUGATED CIRCULAR PIPE

NOTE: DIMPLED BAND FITS OVER OUTSIDE OF ENDWALL. AND CORRUGATED BAND FITS INSIDE ENDWALL. DIMPLED BAND MAY BE USED WITH HELICALLY CORRUGATED PIPE.

FOR CIRCUMFERENTIALLY CORRUGATED PIPE USE ENDWALL CONNECTION DETAILS 1, 2, 3 OR 5 AS APPLICABLE.

FOR HELICALLY CORRUGATED PIPE USE ENDWALL CONNECTION DETAILS 1, 2 OR 5.

FOR HELICALLY CORRUGATED PIPES WITH TWO CIRCUMFERENTIAL CORRUGATIONS AT EACH END USE ENDWALL CONNECTION DETAILS 1, 2 OR 3.

CONNECTION DETAILS

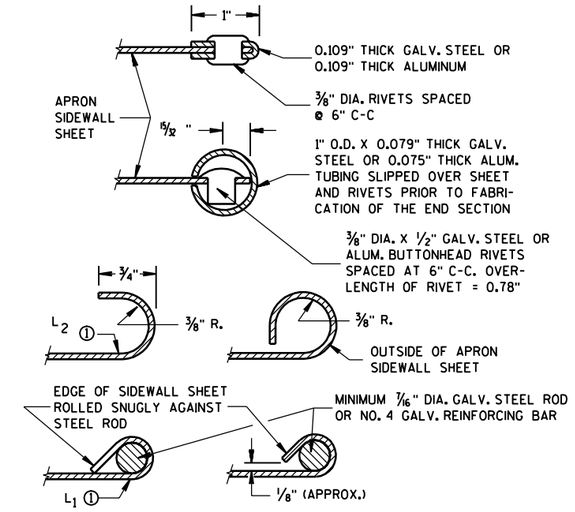

SECTION A-A

GENERAL NOTES

DETAILS OF CONSTRUCTION, MATERIALS AND WORKMANSHIP NOT SHOWN ON THIS DRAWING SHALL CONFORM TO THE PERTINENT REQUIREMENTS OF THE STANDARD SPECIFICATIONS AND THE APPLICABLE SPECIAL PROVISIONS.

CONCRETE CULVERT ENDWALLS MAY NOT BE USED WITH GALVANIZED STEEL OR ALUMINUM CULVERT PIPE OR VISE VERSA. GALVANIZED STEEL OR ALUMINUM ENDWALLS SHALL NORMALLY BE INSTALLED ON CULVERT PIPE OF THE SAME METAL.

ALL THREE PIECE STEEL APRON ENDWALLS FOR 60" DIAMETER PIPE AND LARGER SHALL HAVE 0.109" SIDES AND 0.138" CENTER PANELS. ALL THREE PIECE ALUMINUM APRON ENDWALLS FOR 60" DIAMETER PIPE AND LARGER SHALL HAVE 0.105" SIDES AND 0.134" CENTER PANELS. THE WIDTH OF CENTER PANELS SHALL BE GREATER THAN 20 PERCENT OF THE PIPE PERIMETER.

LAP SEAMS SHALL BE TIGHTLY JOINED BY GALVANIZED RIVETS OR BOLTS FOR STEEL UNITS AND ALUMINUM RIVETS AND BOLTS FOR ALUMINUM UNITS. FOR THE 60" THROUGH 96" DIAMETER APRON ENDWALL SIZES, THE REINFORCED EDGES AND CENTER PANEL SEAMS SHALL BE FURTHER REINFORCED WITH GALVANIZED STEEL OR ALUMINUM STIFFENER ANGLES. THE ANGLES SHALL BE ATTACHED BY GALVANIZED NUTS AND BOLTS FOR STEEL UNITS AND ALUMINUM NUTS AND BOLTS FOR ALUMINUM UNITS.

WHERE TWO OR MORE PIPES WITH APRON ENDWALLS ARE LAID ADJACENT TO EACH OTHER, THEY SHALL BE SEPARATED BY A DISTANCE SUFFICIENT TO PROVIDE A MINIMUM CLEARANCE OF 6 INCHES BETWEEN APRON ENDWALLS.

① FOR PIPE SIZES UP TO 60" DIAMETER, A 180° ROLLED EDGE MAY BE USED INSTEAD OF STEEL ROD REINFORCEMENT. SEE SECTION A-A.

APRON ENDWALLS FOR CULVERT PIPE

STATE OF WISCONSIN
DEPARTMENT OF TRANSPORTATION

APPROVED
11/30/94
DATE
FHWA

CHIEF ROADWAY DEVELOPMENT ENGINEER

6

S.D.D. 8 F 1-11

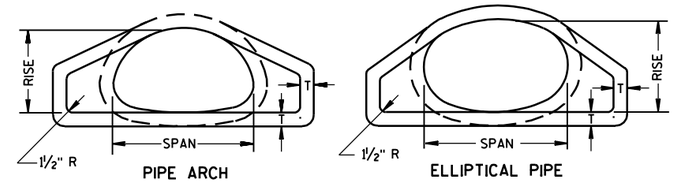

END VIEW

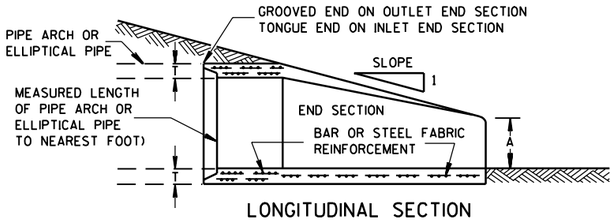

LONGITUDINAL SECTION

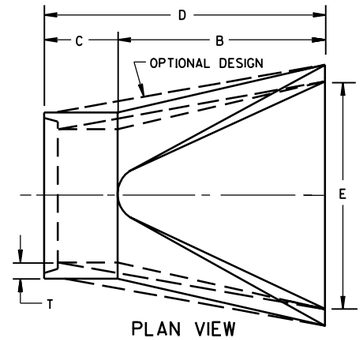

PLAN VIEW

CONCRETE ENDWALLS

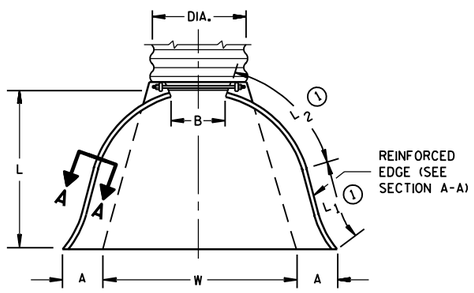

PLAN VIEW

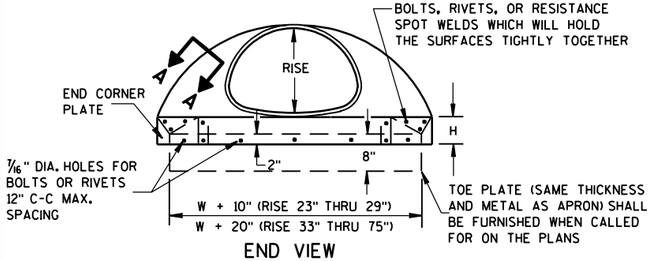

END VIEW

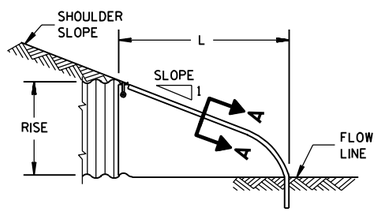

SIDE ELEVATION

METAL ENDWALLS

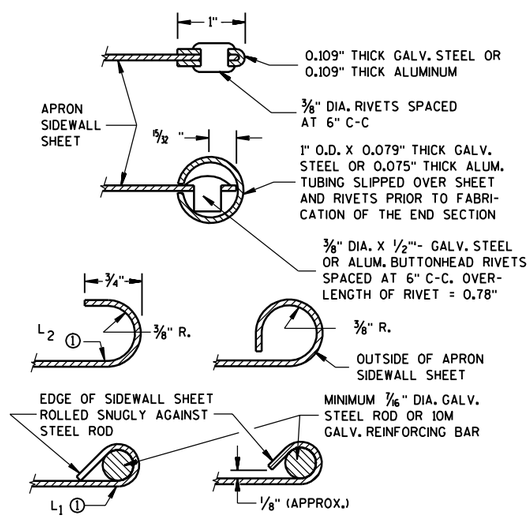

SECTION A-A

2- 2/3" X 1/2" CORRUGATIONS														
EQUIV. DIA. (Inches)	(Inches)		MIN. THICK. (Inches)		DIMENSIONS (Inches)							APPROX. SLOPE	BODY
	SPAN	RISE	STEEL	ALUM.	A (±1")	B (MAX.)	H (±1")	L (±1 1/2")	L1 1	L2 1	W (±2")		
15	17	13	.064	.060	7	9	6	19	14	16	30	2 1/2 to 1	1 Pc.
18	21	15	.064	.060	7	10	6	23	14	19 3/8	36	2 1/2 to 1	1 Pc.
21	24	18	.064	.060	8	12	6	28	18	21 3/4	42	2 1/2 to 1	1 Pc.
24	28	20	.064	.060	9	14	6	32	18	27 1/2	48	2 1/2 to 1	1 Pc.
30	35	24	.079	.075	10	16	6	39	18	37 5/8	60	2 1/2 to 1	1 Pc.
36	42	29	.079	.075	12	18	8	46	24	45 3/8	75	2 1/2 to 1	1 Pc.
42	49	33	.109	.105	13	21	9	53	24	54 3/4	85	2 1/2 to 1	2 Pc.
48	57	38	.109	.105	18	26	12	63	24	68	90	2 1/2 to 1	3 Pc.
54	64	43	.109	.105	18	30	12	70	24	72 3/4	102	2 1/4 to 1	3 Pc.
60	71	47	.109*	.105*	18	33	12	77	30	82 1/4	114	2 1/4 to 1	3 Pc.
66	77	52	.109*	.105*	18	36	12	77	—	—	126	2 to 1	3 Pc.
72	83	57	.109*	.105*	18	39	12	77	—	—	138	2 to 1	3 Pc.

3" X 1" CORRUGATIONS													
EQUIV. DIA. (Inches)	(Inches)		MIN. THICK. (Inches)		DIMENSIONS (Inches)							APPROX. SLOPE	BODY
	SPAN	RISE	STEEL	ALUM.	A (±1")	B (MAX.)	H (±1")	L (±1 1/2")	L1 1	L2 1	W (±2")		
48	53	41	.109	.105	18	26	12	63	24	72 3/4	90	2 1/2 to 1	2 Pc.
54	60	46	.109	.105	18	30	12	70	30	82 1/4	102	2 to 1	2 Pc.
60	66	51	.109*	.105*	18	33	12	77	—	—	114	1 1/2 to 1	3 Pc.
66	73	55	.109*	.105*	18	36	12	77	—	—	126	1 1/2 to 1	3 Pc.
72	81	59	.109*	.105*	18	39	12	77	—	—	138	2 to 1	3 Pc.
78	87	63	.109*	.105*	22	38	12	77	—	—	148	1 1/2 to 1	3 Pc.
84	95	67	.109*	.105*	22	34	12	77	—	—	162	1 1/2 to 1	3 Pc.
90	103	71	.109*	.105*	22	38	12	77	—	—	174	1 1/2 to 1	3 Pc.
96	112	75	.109*	.105*	24	40	12	77	—	—	174	1 1/2 to 1	3 Pc.

NOTE: ALL SPLICES TO BE LAP RIVETED OR BOLTED.

* EXCEPT CENTER PANEL SEE GENERAL NOTES

REINFORCED CONCRETE PIPE ARCH									
EQUIV. DIA. (Inches)	DIMENSIONS (Inches)								APPROX. SLOPE
	** SPAN	** RISE	T	A	B	C	D	E	
24	29	18	3	8 1/2	39	33	72	48	3 to 1
30	36	22	3 1/2	9 1/2	50	46	96	60	3 to 1
36	44	27	4	11 1/8	60	36	96	72	3 to 1
42	51	31	4 1/2	15 13/16	60	36	96	78	3 to 1
48	58	36	5	21	60	36	96	84	3 to 1
54	65	40	5 1/2	25 1/2	60	36	96	90	3 to 1
60	73	45	6	31	60	36	96	96	3 to 1
72	88	54	7	31	60	39	99	120	2 to 1
84	102	62	8	28 1/2	83	19	102	144	2 to 1

REINFORCED CONCRETE ELLIPTICAL PIPE									
EQUIV. DIA. (Inches)	DIMENSIONS (Inches)								APPROX. SLOPE
	** SPAN	** RISE	T	A	B	C	D	E	
24	30	19	3 1/4	8 1/2	39	33	72	48	3 to 1
30	38	24	3 3/4	9 1/2	54	18	72	60	3 to 1
36	45	29	4 1/2	11 1/8	60	24	84	72	2 1/2 to 1
42	53	34	5	15 3/4	60	36	96	78	2 1/2 to 1
48	60	38	5 1/2	21	60	36	96	84	2 1/2 to 1
54	68	43	6	25 1/2	60	36	96	90	2 1/2 to 1
60	76	48	6 1/2	30	60	36	96	96	2 1/2 to 1

** NOMINAL SIZE

GENERAL NOTES

DETAILS OF CONSTRUCTION, MATERIALS AND WORKMANSHIP NOT SHOWN ON THIS DRAWING SHALL CONFORM TO THE PERTINENT REQUIREMENTS OF THE STANDARD SPECIFICATIONS AND THE APPLICABLE SPECIAL PROVISIONS.

CONCRETE APRON ENDWALLS MAY NOT BE USED WITH GALVANIZED STEEL OR ALUMINUM CULVERT PIPE OR VISE VERSA. GALVANIZED STEEL OR ALUMINUM APRON ENDWALLS SHALL NORMALLY BE INSTALLED ON CULVERT PIPE OF THE SAME METAL.

ALL THREE PIECE STEEL APRON ENDWALLS FOR 66" X 51" PIPE ARCH AND LARGER SHALL HAVE 0.109" SIDES AND 0.138" CENTER PANELS. ALL THREE PIECE ALUMINUM APRON ENDWALLS FOR 66" X 51" PIPE ARCH AND LARGER SHALL HAVE 0.105" SIDES AND 0.134" CENTER PANELS. THE WIDTH OF CENTER PANELS SHALL BE GREATER THAN 20 PERCENT OF THE PIPE ARCH PERIMETER.

LAP SEAMS SHALL BE TIGHTLY JOINED BY GALVANIZED RIVETS OR BOLTS FOR STEEL UNITS AND ALUMINUM RIVETS AND BOLTS FOR ALUMINUM UNITS. FOR THE 77" X 52" THROUGH 112" X 75" APRON ENDWALL SIZES, THE REINFORCED EDGES AND CENTER PANEL SEAMS SHALL BE FURTHER REINFORCED WITH GALVANIZED STEEL OR ALUMINUM STIFFENER ANGLES. THE ANGLES SHALL BE ATTACHED BY GALVANIZED NUTS AND BOLTS FOR STEEL UNITS AND ALUMINUM NUTS AND BOLTS FOR ALUMINUM UNITS.

WHERE TWO OR MORE PIPES WITH APRON ENDWALLS ARE LAID ADJACENT TO EACH OTHER, THEY SHALL BE SEPARATED BY A DISTANCE SUFFICIENT TO PROVIDE A MINIMUM CLEARANCE OF 6 INCHES BETWEEN APRON ENDWALLS.

1 FOR PIPE ARCH SIZES UP TO 73" X 55" A 180° ROLLED EDGE MAY BE USED INSTEAD OF STEEL ROD REINFORCEMENT. SEE SECTION A-A.

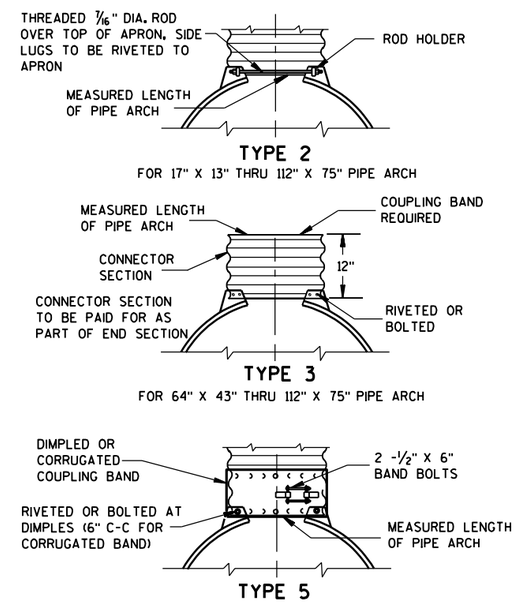

NOTE: DIMPLED BAND FITS OVER OUTSIDE OF ENDWALL. AND CORRUGATED BAND FITS INSIDE ENDWALL.

CONNECTION DETAILS

APRON ENDWALLS FOR PIPE ARCH AND ELLIPTICAL PIPE

STATE OF WISCONSIN
DEPARTMENT OF TRANSPORTATION

APPROVED
11/30/94
DATE
FHWA

CHIEF ROADWAY DEVELOPMENT ENGINEER

6

S.D.D. 8 F 2-1

GENERAL NOTES

DETAILS OF CONSTRUCTION, MATERIALS AND WORKMANSHIP NOT SHOWN ON THIS DRAWING SHALL CONFORM TO THE PERTINENT REQUIREMENTS OF THE STANDARD SPECIFICATIONS AND THE APPLICABLE SPECIAL PROVISIONS.

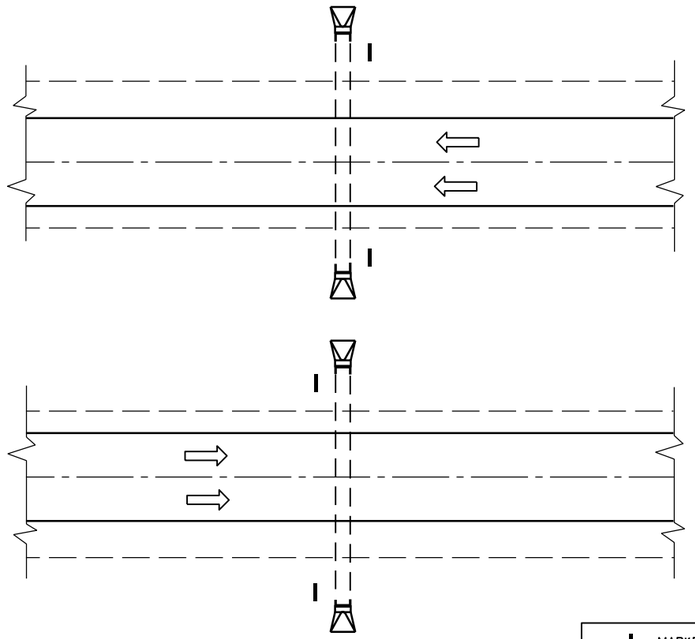

PLAN VIEW

DIVIDED HIGHWAY

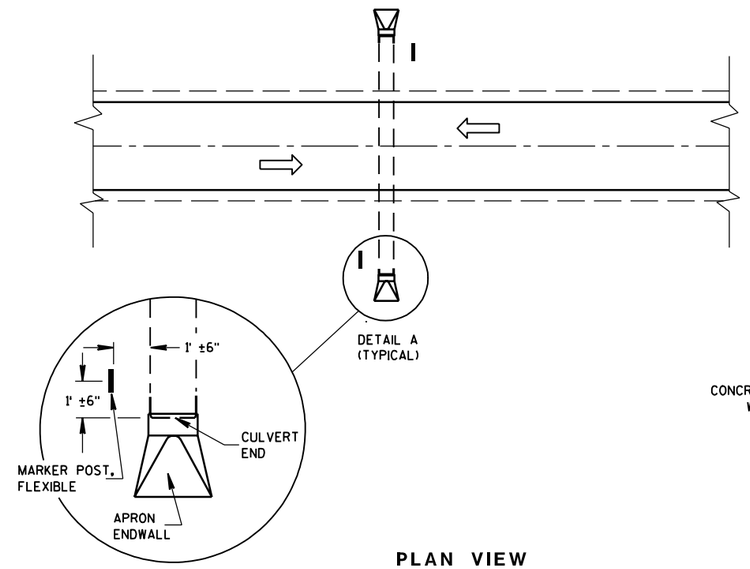

DETAIL A
(TYPICAL)

PLAN VIEW

UNDIVIDED HIGHWAY

I MARKER POST, FLEXIBLE

DIRECTION OF TRAFFIC FLOW

FLEXIBLE MARKER POST LOCATION

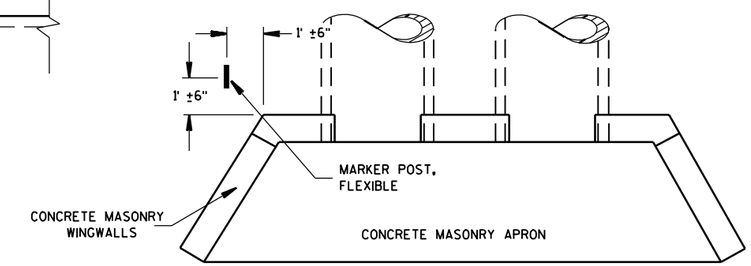

PLAN VIEW

CONCRETE MASONRY ENDWALLS FOR CULVERT PIPE AND PIPE ARCH

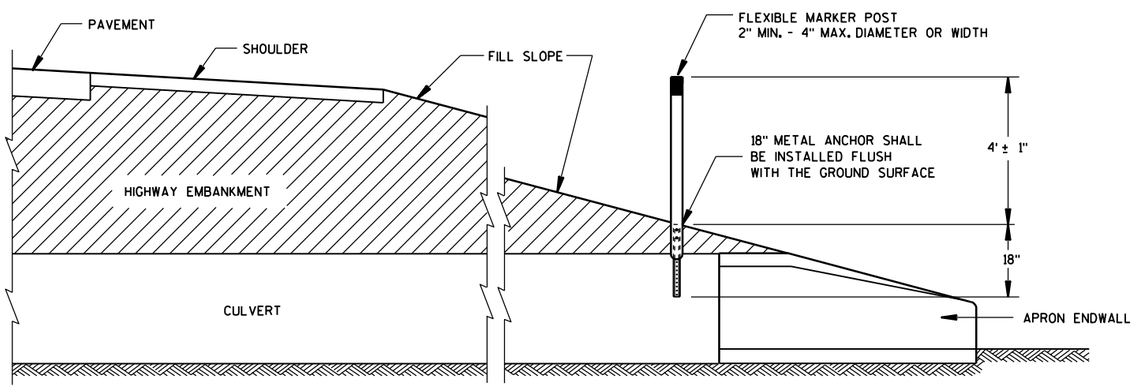

CROSS SECTION

FLEXIBLE MARKER POST

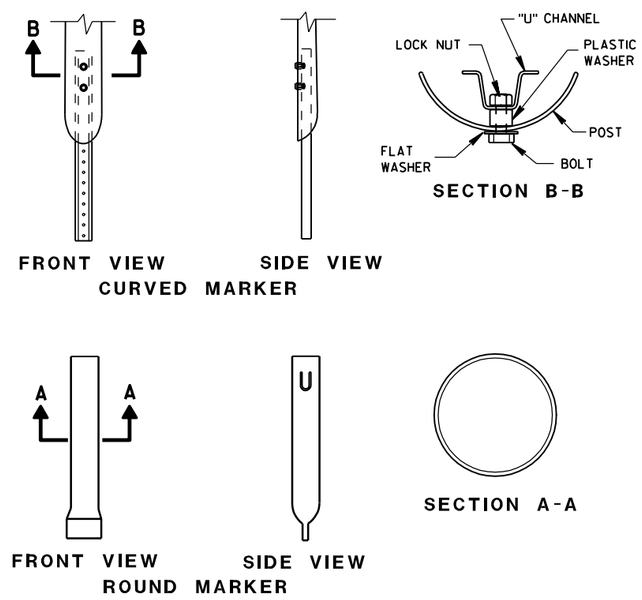

FRONT VIEW SIDE VIEW

CURVED MARKER

SECTION B-B

FRONT VIEW SIDE VIEW

ROUND MARKER

SECTION A-A

FLEXIBLE MARKER POST ANCHORS

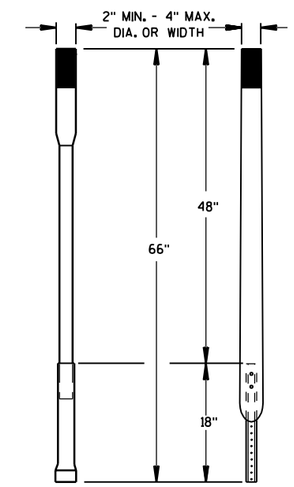

ALTERNATE 1 ALTERNATE 2

FLEXIBLE MARKER POST

MARKER POST, FLEXIBLE,
FOR CULVERT END

STATE OF WISCONSIN
DEPARTMENT OF TRANSPORTATION

APPROVED
10/1/98
DATE
FHWA

CHIEF ROADWAY DEVELOPMENT ENGINEER

6

S.D.D. 15 A 3-1

6

S.D.D. 15 A 3-1

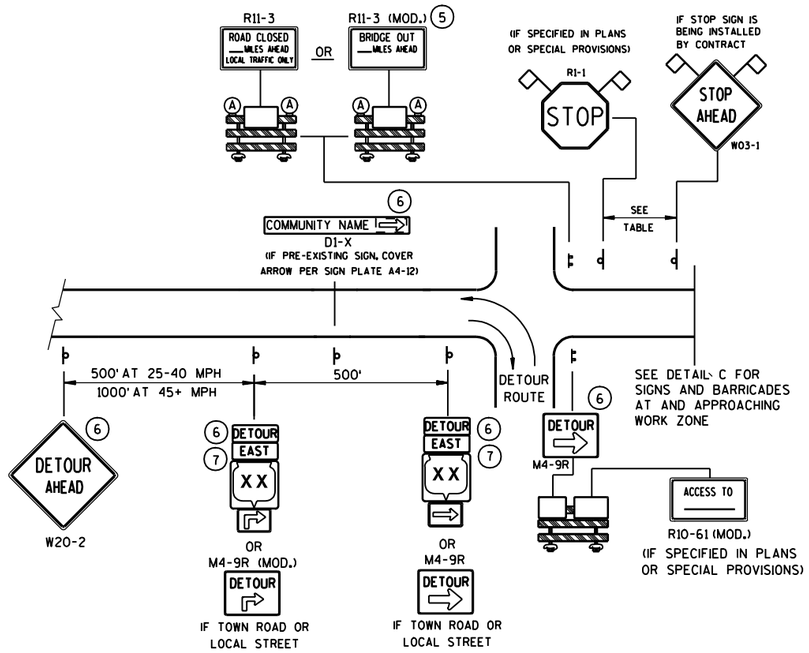

DETAIL A

MAINLINE CLOSURE WITH POSTED DETOUR

WORK ZONE GREATER THAN 1/2 MILE FROM DETOUR ROUTE (1000 FEET IF URBAN)

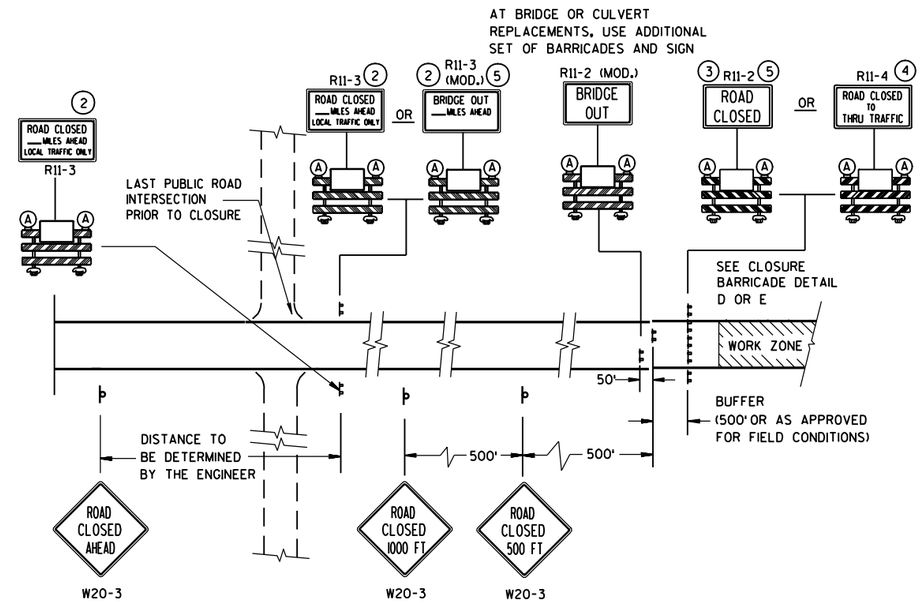

DETAIL C

MAINLINE CLOSURE, NO POSTED DETOUR

SPEED LIMIT (MPH)	"STOP AHEAD" ADVANCE WARNING DISTANCE (FT)
25	200
30	200
35	350
40	350
45	500
50	550
55	750

SEE SDD 15C2-4b FOR GENERAL NOTES AND FOOTNOTES 1 THROUGH 7

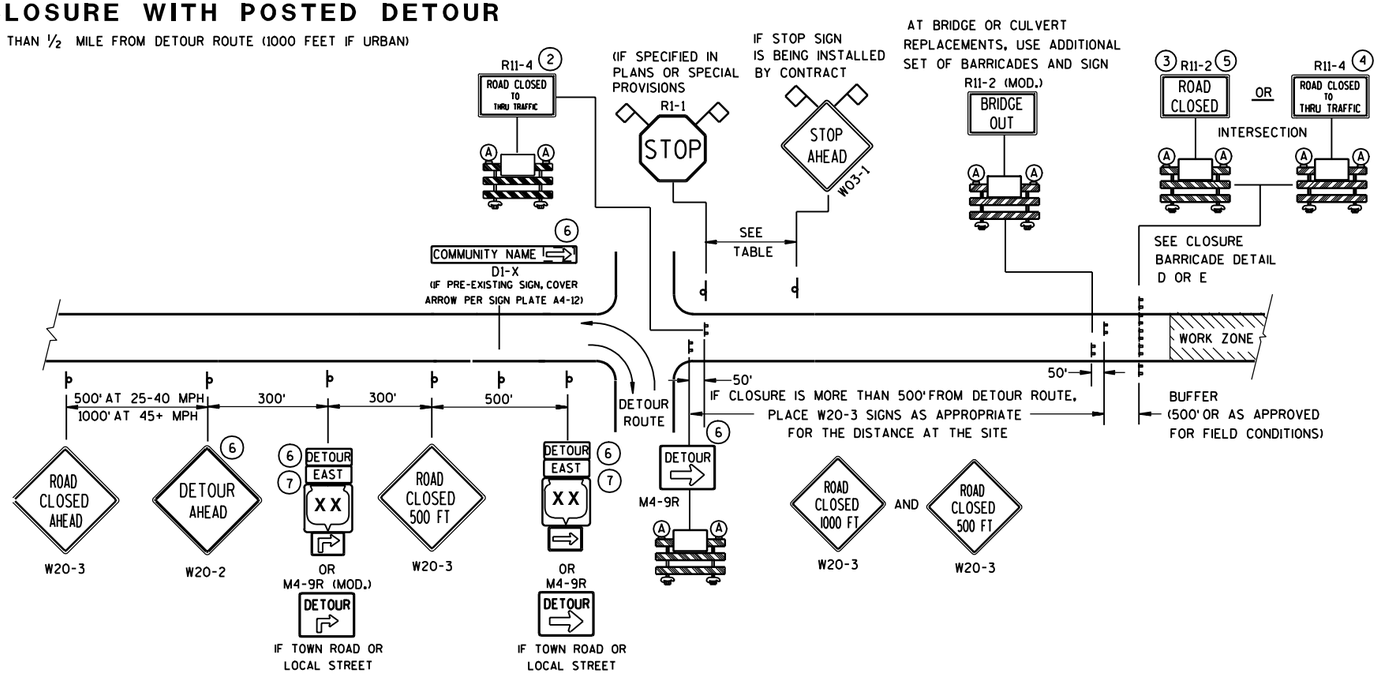

DETAIL B

MAINLINE CLOSURE WITH POSTED DETOUR

WORK ZONE LESS THAN 1/2 MILE FROM DETOUR ROUTE (1000 FEET IF URBAN)

LEGEND

- POST MOUNTED SIGN
- TYPE III BARRICADES
- (A) TYPE "A" LOW INTENSITY FLASHING WARNING LIGHT (FOR NIGHT USE)
- WORK ZONE
- DETOUR EAST — M4-8, M3-X
- XX — M1-4; OR COUNTY XX — M1-5A; OR XX — M1-6
- M05-1 OR M06-1
- FLAGS, 16" X 16" MIN., (ORANGE)

BARRICADES AND SIGNS FOR MAINLINE CLOSURES

STATE OF WISCONSIN
DEPARTMENT OF TRANSPORTATION

6

S.D.D. 15 C 2-4a

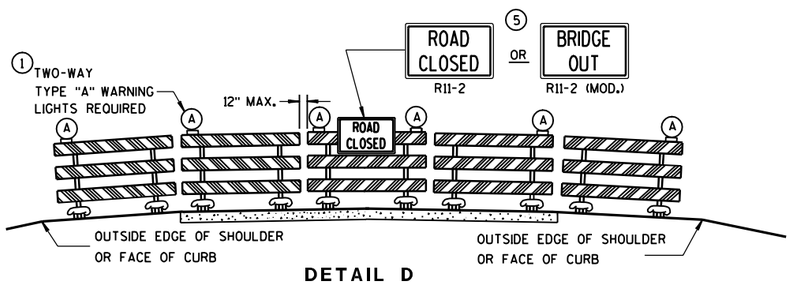

DETAIL D

ROAD CLOSURE BARRICADE DETAIL

APPROACH VIEW

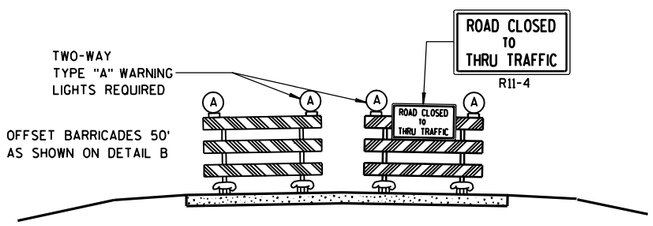

DETAIL E

LANE CLOSURE BARRICADE DETAIL

APPROACH VIEW

SEE SDD 15C2-4a FOR LEGEND

GENERAL NOTES

THE EXACT NUMBER, LOCATION, AND SPACING OF ALL SIGNS AND BARRICADES SHALL BE ADJUSTED TO FIT FIELD CONDITIONS AS APPROVED BY THE ENGINEER.

ANY SIGNS TEMPORARY OR EXISTING, WHICH CONFLICT WITH TRAFFIC CONTROL "IN USE" SHALL BE REMOVED OR COVERED AS NEEDED AND AS APPROVED BY THE ENGINEER.

THE SPACING BETWEEN TRAFFIC CONTROL SIGNS SHOULD BE ADJUSTED TO NOT CONFLICT WITH AND SHOULD PROVIDE A DESIRABLE MINIMUM OF 200 FEET CLEARANCE TO EXISTING SIGNS THAT WILL REMAIN IN PLACE.

BARRICADES THAT MUST BE MOVED FOR A WORK OPERATION SHALL BE IMMEDIATELY RE-ESTABLISHED UPON COMPLETION OF THE OPERATION OR, FOR CONTINUING OPERATIONS, AT THE END OF EACH WORKING DAY.

SIGNS THAT WILL BE IN PLACE LESS THAN 7 CONTINUOUS DAYS AND NIGHTS MAY BE MOUNTED ON PORTABLE SUPPORTS.

ALL TYPE III BARRICADES SHALL HAVE RAILS REFLECTORIZED ON BOTH FACES. STRIPES SHALL BE PROPERLY SLOPED DOWN TOWARD THE TRAFFIC SIDE OR AS SHOWN IN THE ROAD CLOSURE BARRICADE DETAIL D FOR FULL ROAD CLOSURES.

TYPE "A" LOW-INTENSITY FLASHING WARNING LIGHTS SHALL BE VISIBLE ON BOTH SIDES OF THE BARRICADE.

THE R11-2, R11-3, M4-9, R11-4 AND R10-61 SIGNS PLACED ON BARRICADES SHALL COVER NO MORE THAN THE TOP RAIL. THE SIGNS SHALL NOT COVER ANY PORTION OF THE MIDDLE OR BOTTOM RAILS.

THE REFLECTIVE SHEETING USED ON R11-2, R11-3, R11-4, R10-61 AND R1-1 SIGNS SHALL COMPLY WITH SUBSECTION 637.2.2.2 OF THE STANDARD SPECIFICATIONS.

"WO AND "MO" SIGNS ARE THE SAME AS "W" AND "M" SIGNS EXCEPT THE BACKGROUND IS ORANGE.

ALL SIGNS SHALL BE 48" X 48" UNLESS OTHERWISE NOTED BELOW:

R11-2 SHALL BE 48" X 30".
R11-3, R11-4 AND R10-61 SHALL BE 60" X 30".
M4-9 SHALL BE 30" X 24".
M3-X AND M4-8 SHALL BE 24" X 12". (30" X 15" IF NEEDED TO MATCH EXISTING SIGNS.)
M1-4, M1-5A, AND M1-6 SHALL BE 24" X 24". (36" X 36" IF NEEDED TO MATCH EXISTING SIGNS.)
M05-1 AND M06-1 SHALL BE 21" X 21". (30" X 30" IF NEEDED TO MATCH EXISTING SIGNS.)
D1-X SHALL BE AS SHOWN ON SPECIFIC PROJECT SIGNING DETAIL SHEETS.
R1-1 SHALL BE 36" X 36".

1. TWO WARNING LIGHTS SHALL BE PROVIDED ON THE CENTER BARRICADE AND A MINIMUM OF ONE WARNING LIGHT SHALL BE PROVIDED ON EACH OF THE OTHER BARRICADES WITHIN THE ROADWAY LIMITS. SPACING OF THE WARNING LIGHTS SHALL BE UNIFORM TO THE EDGE OF ROADWAY AS SHOWN (APPROX. 8-FOOT LIGHT SPACING).
2. THESE SIGNS AND BARRICADES ARE NOT REQUIRED IF ROAD CLOSURE BEGINS AT INTERSECTION.
3. FOR ROAD CLOSURE WITHOUT LOCAL ACCESS TO PROJECT, SEE ROAD CLOSURE BARRICADE DETAIL D.
4. FOR ROAD CLOSURE WITH LOCAL ACCESS TO PROJECT, SEE LANE CLOSURE BARRICADE DETAIL E.
5. FOR BRIDGE OR CULVERT REPLACEMENTS, SUBSTITUTE "BRIDGE OUT" INSTEAD OF "ROAD CLOSED" ON R11-2 AND R11-3 SIGNS.
6. INSTALL DETOUR AND COMMUNITY GUIDE SIGNS AND ARROWS ONLY IF SPECIFIED IN THE CONTRACT. IF THERE ARE EXISTING ROUTE MARKER ASSEMBLIES THAT WILL REMAIN IN PLACE, ADJUST THE LOCATION OF THE DETOUR ROUTE SIGNS TO CORRESPOND WITH THE EXISTING ASSEMBLIES. MODIFY EXISTING SIGNS WHERE POSSIBLE. SEE SPECIFIC PROJECT DETOUR SIGNING DETAIL SHEETS. IF DETOUR SIGNS ARE BEING INSTALLED BY OTHERS, PLACE THE CONTRACTED TRAFFIC CONTROL SIGNS TO ALLOW FOR PLACEMENT OF ALL WARNING, DETOUR AND GUIDE SIGNS AS SHOWN.
7. "EAST" CARDINAL DIRECTION MARKERS AND RIGHT TURN ARROWS ARE SHOWN. USE OTHER CARDINAL DIRECTIONS AND ARROWS AS APPROPRIATE.

BARRICADES AND SIGNS FOR MAINLINE CLOSURES

STATE OF WISCONSIN
DEPARTMENT OF TRANSPORTATION

APPROVED
9/16/03
DATE
Thomas N. Notbohm for
CHIEF SIGNS AND MARKING ENGINEER
FHWA

6
S.D.D. 15 C 2-4b

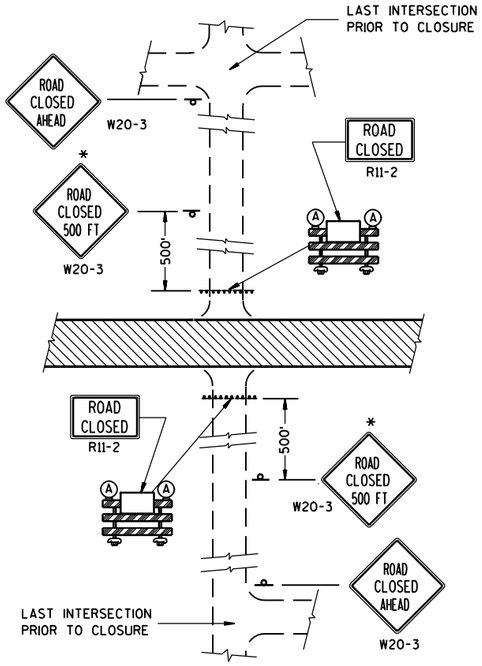

DETAIL 1

(NO ACCESS TO PROJECT)

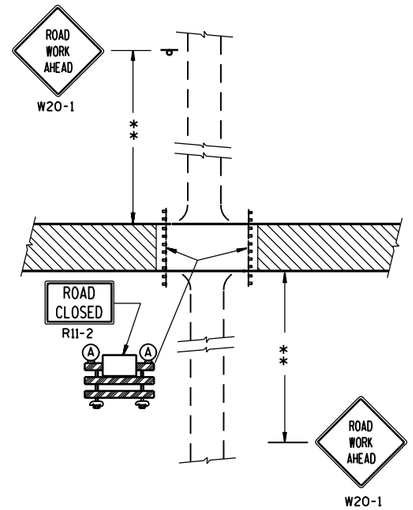

DETAIL 2

(PUBLIC CROSS-TRAFFIC MAINTAINED.
NO ACCESS TO PROJECT).

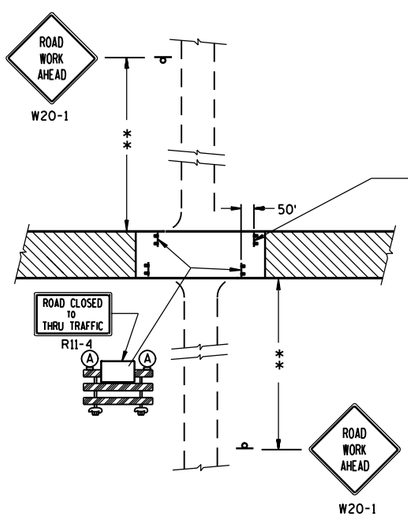

DETAIL 3

(PUBLIC CROSS-TRAFFIC MAINTAINED. CONTRACTOR,
LOCAL BUSINESS AND RESIDENT ACCESS).

FOR BRIDGE OR CULVERT REPLACEMENT, USE ADDITIONAL SIGN ON BARRICADE

BRIDGE OUT
XX MILES AHEAD
R11-3 (MOD.)

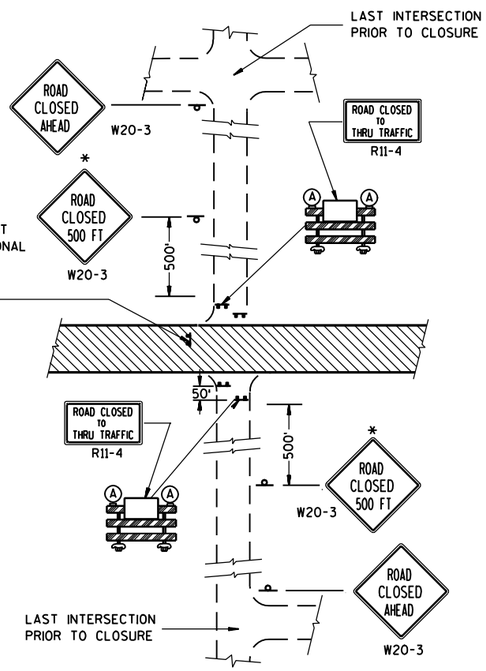

DETAIL 4

(CONTRACTOR, LOCAL BUSINESS AND
RESIDENT ACCESS TO PROJECT)

GENERAL NOTES

THE EXACT NUMBER, LOCATION, AND SPACING OF ALL SIGNS AND BARRICADES SHALL BE ADJUSTED TO FIT FIELD CONDITIONS AS APPROVED BY THE ENGINEER.

ANY SIGNS TEMPORARY OR EXISTING, WHICH CONFLICT WITH TRAFFIC CONTROL "IN USE" SHALL BE REMOVED OR COVERED AS NEEDED AND AS APPROVED BY THE ENGINEER.

THE SPACING BETWEEN TRAFFIC CONTROL SIGNS SHOULD BE ADJUSTED TO NOT CONFLICT WITH AND SHOULD PROVIDE A DESIRABLE MINIMUM OF 200 FEET CLEARANCE TO EXISTING SIGNS THAT WILL REMAIN IN PLACE.

IF A "STOP" SIGN MUST BE REMOVED FOR A WORK OPERATION, A TEMPORARY "STOP" SIGN SHALL BE PLACED PRIOR TO THE SIGN REMOVAL, OR A FLAGGER SHALL BE PROVIDED UNTIL THE SIGN IS RE-ESTABLISHED.

BARRICADES THAT MUST BE MOVED FOR A WORK OPERATION SHALL BE IMMEDIATELY RE-ESTABLISHED UPON COMPLETION OF THE OPERATION OR, FOR CONTINUING OPERATIONS, AT THE END OF EACH WORKING DAY.

SIGNS THAT WILL BE IN PLACE LESS THAN 7 CONTINUOUS DAYS AND NIGHTS MAY BE MOUNTED ON PORTABLE SUPPORTS.

ALL TYPE III BARRICADES SHALL HAVE RAILS REFLECTORIZED ON BOTH FACES. STRIPES SHALL BE PROPERLY SLOPED DOWN TOWARD THE TRAFFIC SIDE OR AS SHOWN IN THE ROAD CLOSURE BARRICADE DETAIL D FOR FULL ROAD CLOSURES.

TYPE "A" LOW-INTENSITY FLASHING WARNING LIGHTS SHALL BE VISIBLE ON BOTH SIDES OF THE BARRICADE.

THE R11-2, R11-3 AND R11-4 SIGNS PLACED ON BARRICADES SHALL COVER NO MORE THAN THE TOP RAIL. THE SIGNS SHALL NOT COVER ANY PORTION OF THE MIDDLE OR BOTTOM RAILS.

THE REFLECTIVE SHEETING USED ON R11-2, R11-3 AND R11-4 SIGNS SHALL COMPLY WITH SUBSECTION 637.2.2.2 OF THE STANDARD SPECIFICATIONS.

ALL SIGNS SHALL BE 48" X 48" UNLESS OTHERWISE NOTED BELOW:
R11-2 SHALL BE 48" X 30".
R11-4 AND R11-3 SHALL BE 60" X 30".

*OMIT THE "ROAD CLOSED 500 FT." SIGN IF THE LAST INTERSECTION IS 500 FT. OR LESS FROM THE WORK ZONE.

**500' MAX. OR AT LAST INTERSECTION WHICHEVER IS CLOSER.

LEGEND

- POST MOUNTED WARNING SIGN
- TYPE III BARRICADES
- (A) TYPE "A" LOW INTENSITY FLASHING WARNING LIGHT (FOR NIGHT USE)
- WORK AREA

BARRICADES AND SIGNS FOR SIDEROAD CLOSURES

STATE OF WISCONSIN
DEPARTMENT OF TRANSPORTATION

APPROVED
9-16-03
DATE
FHWA

Thomas N. Notthom for
CHIEF SIGNS AND MARKING ENGINEER

6

S.D.D. 15 C 3-1

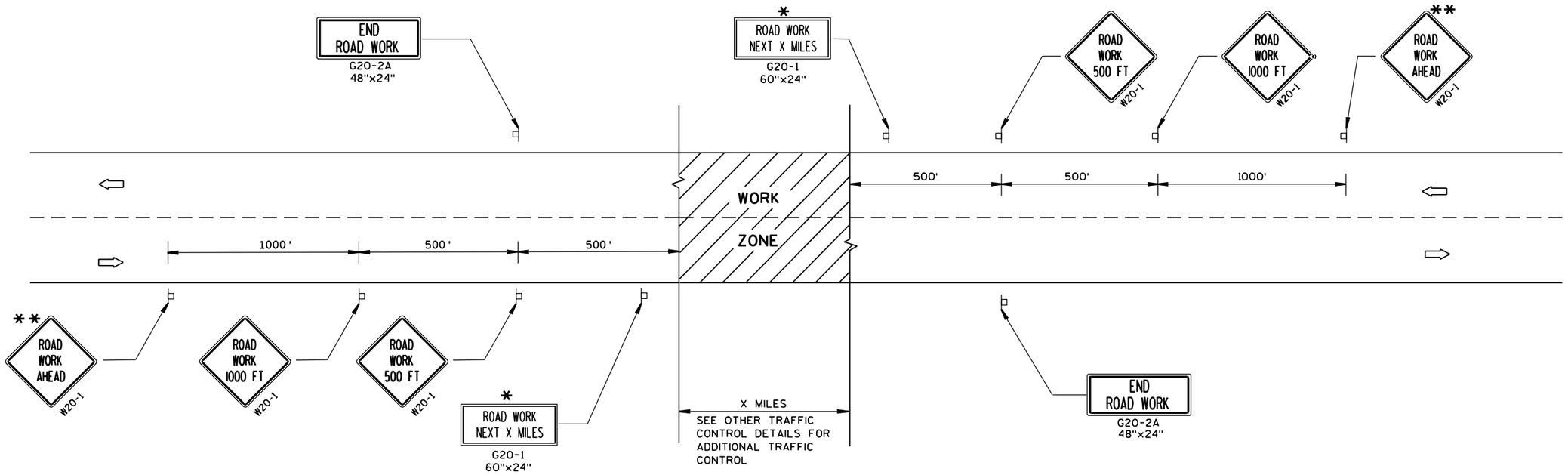

TYPICAL SIDEROAD APPROACH WARNING SIGN DETAIL

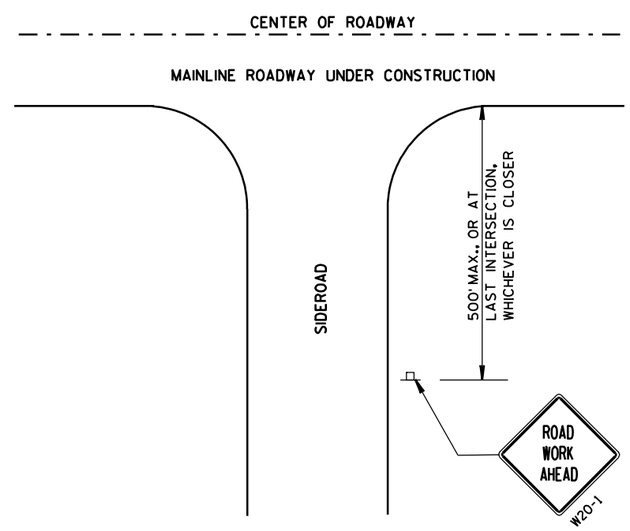

GENERAL NOTES

THE EXACT NUMBER, LOCATION, AND SPACING OF ALL SIGNS AND DEVICES SHALL BE ADJUSTED TO FIT FIELD CONDITIONS.

THE SPACING BETWEEN TRAFFIC CONTROL SIGNS SHOULD BE ADJUSTED TO NOT CONFLICT WITH AND SHOULD PROVIDE A MINIMUM OF 200 FEET (500 FEET DESIRABLE) CLEARANCE TO EXISTING SIGNS THAT WILL REMAIN IN PLACE.

ALL SIGNS ARE 48"x48" UNLESS OTHERWISE NOTED.

SIGNS THAT WILL BE IN PLACE LESS THAN 7 CONTINUOUS DAYS AND NIGHTS MAY BE MOUNTED ON PORTABLE SUPPORTS.

IF A "STOP" SIGN MUST BE REMOVED FOR A WORK OPERATION, A TEMPORARY "STOP" SIGN SHALL BE PLACED PRIOR TO THE SIGN REMOVAL, OR A FLAGGER SHALL BE PROVIDED UNTIL THE SIGN IS RE-ESTABLISHED.

* OMIT G20-1 SIGNS IF LENGTH OF WORK AREA IS 2 MILES OR LESS.

** PLACE ADDITIONAL W20-1 "ROAD WORK AHEAD" SIGN IF WORK AREA WITHIN THE PROJECT IS SEPARATED BY MORE THAN 2 MILES FROM PREVIOUS WORK AREA OR SIGNING.

LEGEND

POST MOUNTED SIGN

DIRECTION OF TRAFFIC FLOW

TRAFFIC CONTROL,
ADVANCE WARNING SIGNS
45 M.P.H. OR GREATER
TWO-WAY UNDIVIDED ROAD OPEN TO TRAFFIC

STATE OF WISCONSIN
DEPARTMENT OF TRANSPORTATION

APPROVED
5/23/00
DATE
Clinton J. Sparks
CHIEF SIGNS AND MARKING ENGINEER
FHWA

6

S.D.D. 15 C 4-1

6

S.D.D. 15 C 4-1

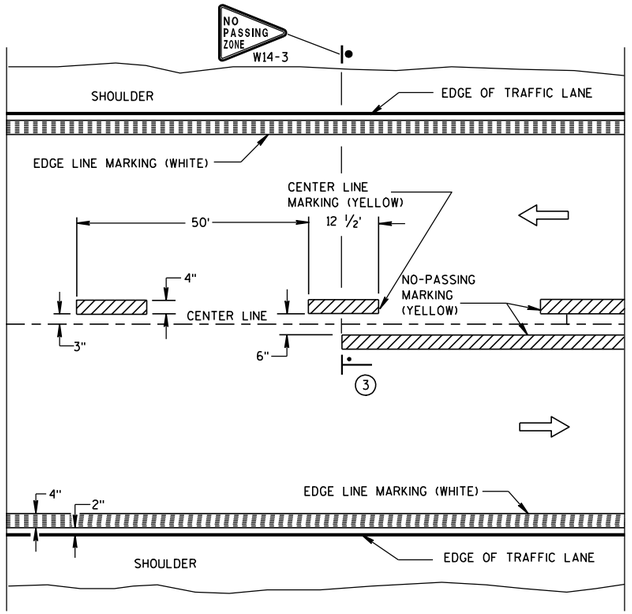

TWO WAY TRAFFIC

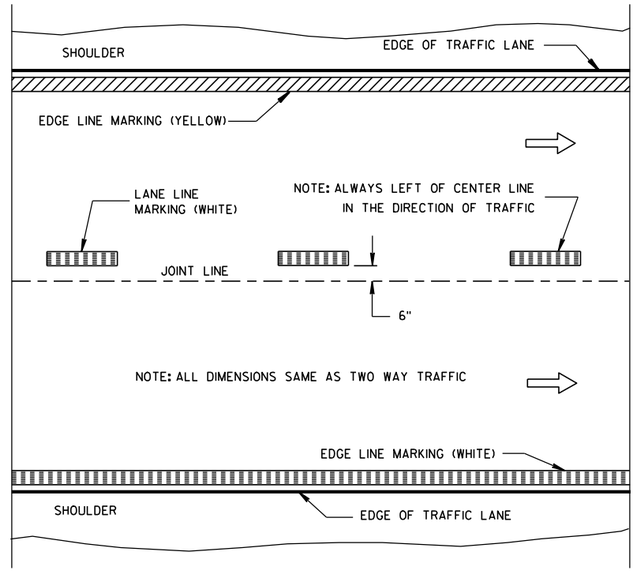

ONE WAY TRAFFIC

PERMANENT PAVEMENT MARKING

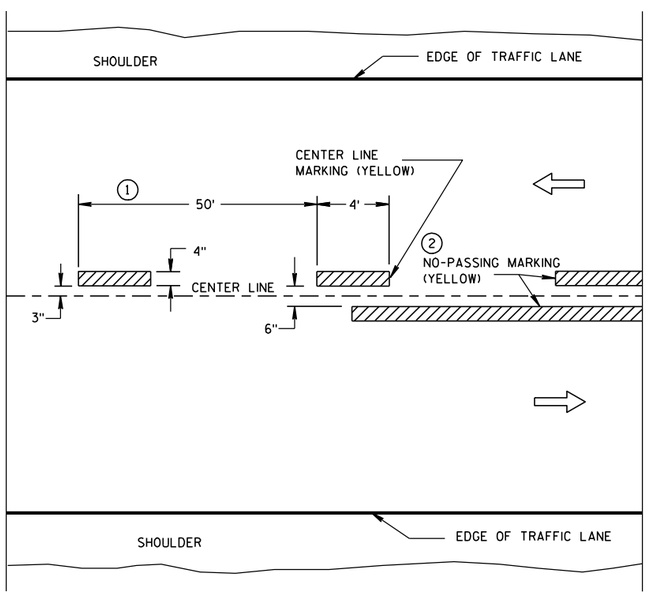

TWO WAY TRAFFIC

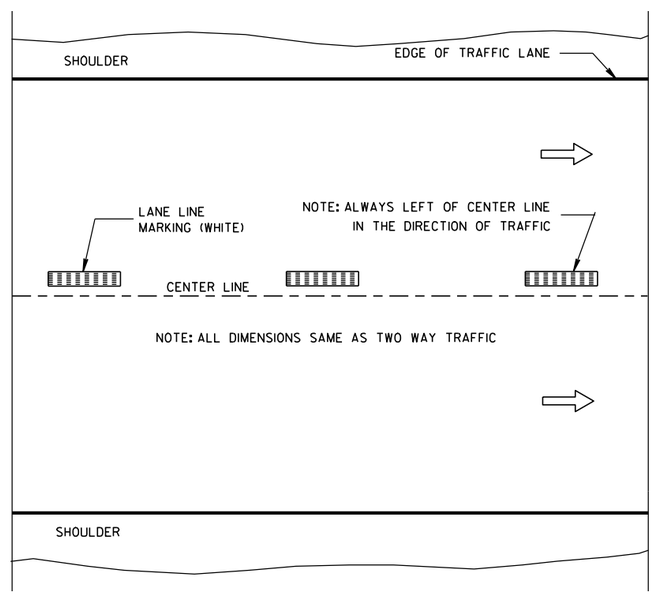

ONE WAY TRAFFIC

TEMPORARY (INTERMEDIATE) PAVEMENT MARKING

(SHOWS CYCLE FOR TEMPORARY CENTER LINE OR TEMPORARY LANE LINE MARKING)

GENERAL NOTES

DETAILS OF CONSTRUCTION NOT SHOWN ON THIS DRAWING SHALL CONFORM TO STANDARD SPECIFICATIONS AND SPECIAL PROVISIONS.

1. HALF CYCLE LENGTHS (25'±) WITH 2' MINIMUM STRIPE LENGTHS SHALL BE PROVIDED ON ROADWAYS (INCLUDING TEMPORARY TRAVELED WAYS) WITH REVERSE CURVATURE, CURVATURE OF OVER 5 DEGREES OR WHEN DIRECTED BY THE ENGINEER TO MARK UNUSUAL ALIGNMENT OF THE TRAVELED WAY.

2. NO PASSING ZONE TEMPORARY PAVEMENT MARKING IS REQUIRED TO BE PLACED, WHERE APPROPRIATE, ALONG WITH CENTERLINE TEMPORARY PAVEMENT MARKING WHEN A SAME DAY PERMANENT PAVEMENT MARKING ITEM IS INCLUDED IN THE CONTRACT.

3. NO PASSING ZONE MARKINGS ARE PLACED ACCORDING TO "T" MARKINGS. IF EXISTING NO PASSING ZONE W14-3 SIGNS ARE BEYOND 50 FEET IN EITHER DIRECTION, THE SIGNS SHALL BE MOVED TO THE "T" MARKINGS.

NOTE

ARROW SYMBOL (⇨) SHOWS DIRECTION OF TRAVEL

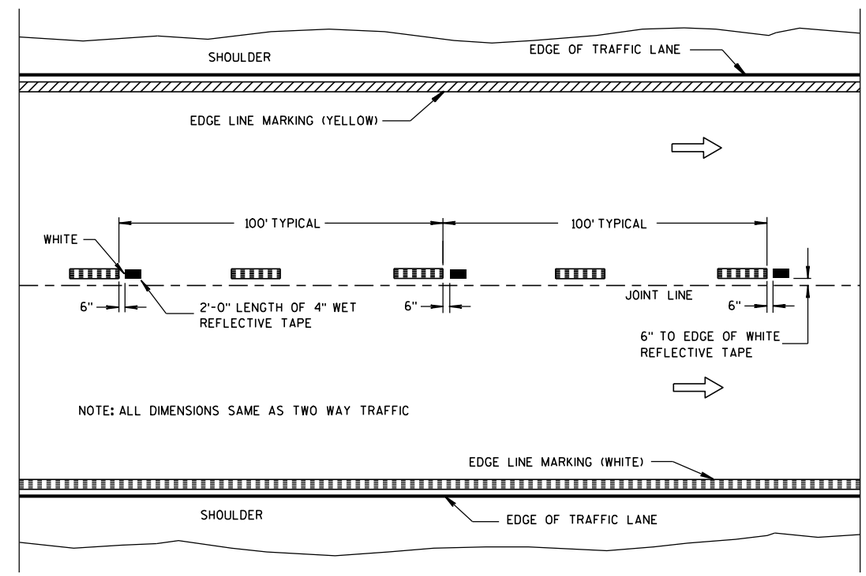

WET REFLECTIVE TAPE SUPPLEMENT TO SPRAYED OR NON WET REFLECTIVE TAPE LANE LINE

LEGEND

"T" MARKING

POST MOUNTED SIGN

PAVEMENT MARKING (MAINLINE)

STATE OF WISCONSIN
DEPARTMENT OF TRANSPORTATION

APPROVED
5-13-10 — DATE
/S/ Thomas N. Notbohm — STATE TRAFFIC ENGINEER OF DESIGN
FHWA

6

S.D.D. 15 C 8-13a

TWO-LANE ROADWAY

SYMBOLS

- WORK AREA
- FLAGGER, EQUIPPED WITH STOP/SLOW PADDLE FASTENED ON SUPPORT STAFF
- SIGN ON PORTABLE OR PERMANENT SUPPORT

USE OF THE "BE PREPARED TO STOP" SIGN IS OPTIONAL. WHEN USED, THIS SIGN SHALL BE LOCATED BETWEEN THE W20-7a AND W20-4 SIGNS. A 500' TYPICAL SPACING SHALL BE PROVIDED BETWEEN THE SIGNS.

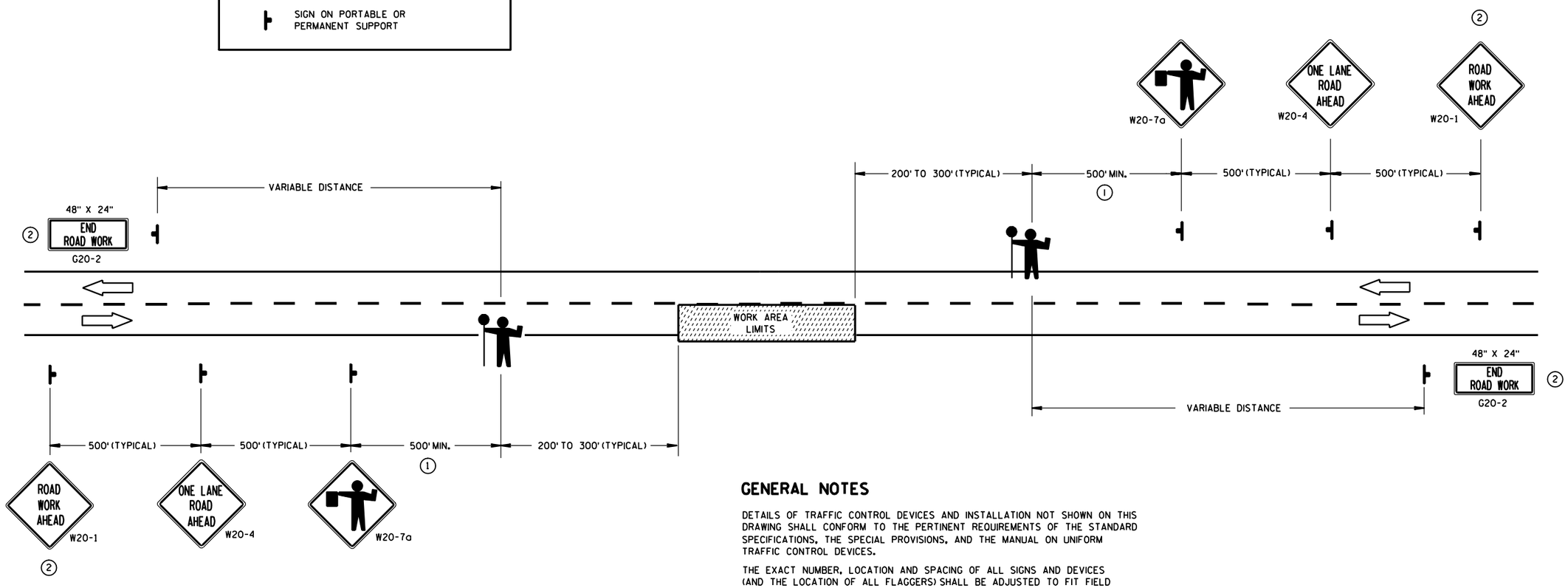

1. FOR A MOVING WORK OPERATION, SIGNING FOR BOTH DIRECTIONS SHALL BE REESTABLISHED (AS SIMULTANEOUSLY AS PRACTICAL) AT APPROXIMATELY 3500 FOOT INTERVALS IN THE MOVING WORK OPERATION OR AS APPROVED BY THE ENGINEER.

2. SIGN NOT REQUIRED IF FLAGGING OPERATION OCCURS WITHIN A SIGNED ROAD WORK ZONE AREA.

GENERAL NOTES

DETAILS OF TRAFFIC CONTROL DEVICES AND INSTALLATION NOT SHOWN ON THIS DRAWING SHALL CONFORM TO THE PERTINENT REQUIREMENTS OF THE STANDARD SPECIFICATIONS, THE SPECIAL PROVISIONS, AND THE MANUAL ON UNIFORM TRAFFIC CONTROL DEVICES.

THE EXACT NUMBER, LOCATION AND SPACING OF ALL SIGNS AND DEVICES (AND THE LOCATION OF ALL FLAGGERS) SHALL BE ADJUSTED TO FIT FIELD CONDITIONS AS APPROVED BY THE ENGINEER.

THE FIRST ADVANCE WARNING SIGN SHOULD TYPICALLY BE LOCATED IN ADVANCE OF THE ANTICIPATED TRAFFIC BACKUP OR QUEUE.

WHEN A SIDE ROAD OR RAMP INTERSECTS THE FACILITY ON WHICH THE WORK IS BEING PERFORMED, ADDITIONAL TRAFFIC CONTROLS SHALL BE PROVIDED AS SPECIFIED IN THE PLANS AND/OR THE SPECIAL PROVISIONS OR AS APPROVED BY THE ENGINEER.

FLAGGERS SHALL BE IN SIGHT OF EACH OTHER OR IN DIRECT COMMUNICATION AT ALL TIMES. THEY SHALL BE EQUIPPED WITH STOP/SLOW PADDLES FASTENED ON SUPPORT STAFFS. WHEN THE FLAGGING OPERATION IS NOT IN EFFECT, THE "FLAGGER AHEAD", THE "ROAD WORK AHEAD" AND THE ONE LANE ROAD AHEAD" SIGNS SHALL BE COVERED OR REMOVED AND THE HIGHWAY RESTORED TO NORMAL OPERATION.

ALL SIGNS ARE 48" X 48" UNLESS OTHERWISE NOTED.

TRAFFIC CONTROL FOR LANE CLOSURE (SUITABLE FOR MOVING OPERATIONS)

STATE OF WISCONSIN
DEPARTMENT OF TRANSPORTATION

APPROVED
9/5/06 — DATE
/S/ Thomas N. Notbohm — STATE TRAFFIC ENGINEER OF DESIGN
FHWA

6

S.D.D. 15 C 12-3

6

S.D.D. 15 C 12-3

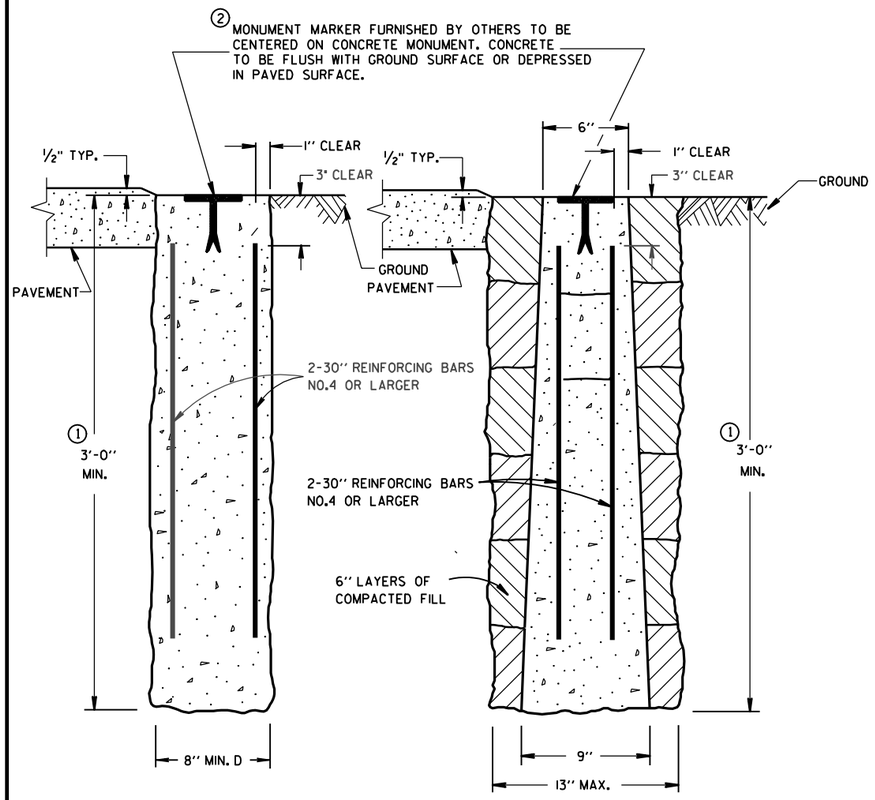

CAST-IN-PLACE PRECAST

CONCRETE MONUMENTS

TYPE A

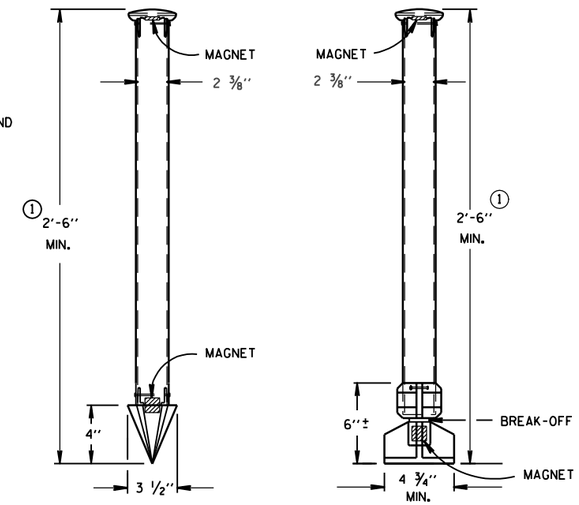

TYPE C DRIVE-IN MONUMENT

TYPE D BREAK-OFF MONUMENT

ALUMINUM MONUMENTS

(INCLUDES MARKER)

GENERAL NOTES

DETAILS OF CONSTRUCTION, MATERIALS AND WORKMANSHIP NOT SHOWN ON THIS DRAWING SHALL CONFORM TO THE PERTINENT REQUIREMENTS OF THE STANDARD SPECIFICATIONS AND THE APPLICABLE SPECIAL PROVISIONS.

DETAILED DRAWINGS OF PROPOSED ALTERNATE DESIGNS FOR METAL MONUMENTS OR MONUMENT COVERS SHALL BE SUBMITTED TO THE ENGINEER FOR APPROVAL.

INSTALLED METAL MONUMENTS MUST BE EASILY DETECTED WITH A DIP NEEDLE. INSERT PERMANENT MAGNETS SHALL BE ATTACHED NEAR THE TOP AND BOTTOM OF THOSE MONUMENTS CONSTRUCTED OF A METAL ALLOY WHICH IS NOT ATTRACTIVE TO A DIP NEEDLE.

THE CAST IRON MONUMENT COVER SHALL BE A "NON-ROCKING" TYPE. ADJUSTMENT OF THE COVER TO GRADE MAY BE ACCOMPLISHED BY THE USE OF MORTAR AND BRICK, OR BY EITHER PRECAST OR CAST-IN-PLACE REINFORCED CONCRETE GRADE RINGS.

MONUMENTS SHALL BE LOCATED AND PLACED AT THE DIRECTION OF THE ENGINEER.

ALUMINUM MONUMENTS AND MONUMENT COVERS SHALL BE MADE FROM AN ALUMINUM AND MAGNESIUM ALLOY AS DETERMINED BY THE MANUFACTURER.

THE MONUMENT COVERS DETAILED ON THIS DRAWING ARE NOT EQUAL ALTERNATES. MONUMENT COVERS SHALL BE CAST IRON UNLESS ALUMINUM IS SPECIFIED ELSEWHERE IN THE CONTRACT.

MONUMENT SHALL BE CAST-IN-PLACE CONCRETE UNLESS PRECAST CONCRETE OR ALUMINUM MONUMENTS ARE SPECIFIED IN THE CONTRACT OR PERMITTED BY THE ENGINEER.

① MINIMUM LENGTH SHALL BE 4'-0" FOR MONUMENTS INSTALLED IN PAVED AREAS.

② AN OFFICIAL COUNTY MONUMENT MARKER SUPPLIED BY A COUNTY MAY BE REQUIRED FOR SOME SECTION CORNERS AND WITNESS MONUMENTS INSTEAD OF THIS WIS DOT MARKER.

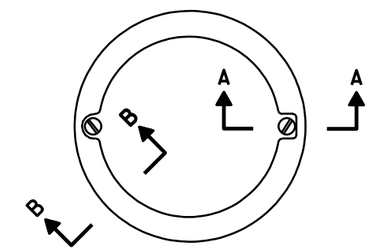

TOP VIEW

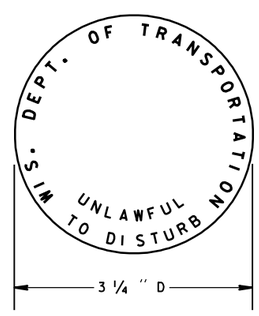

② WIS DOT MONUMENT MARKER LOGO

FOR TYPES "A", "C" & "D"

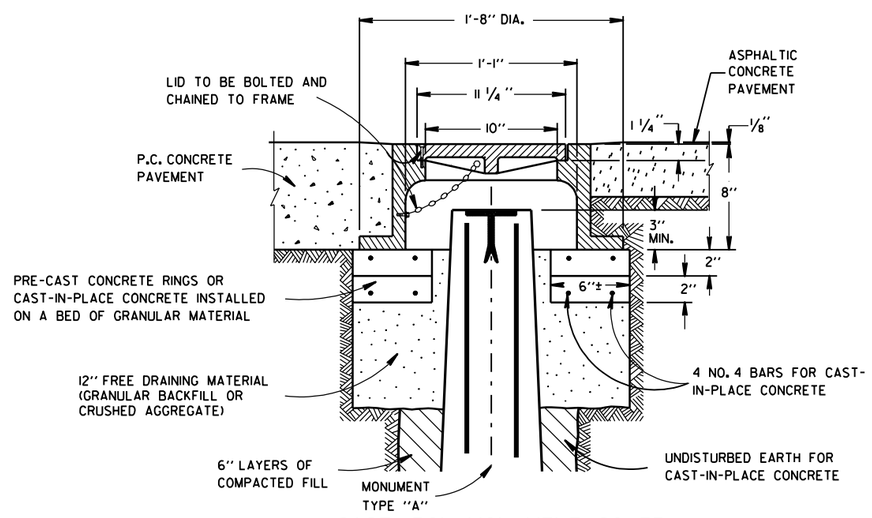

CAST IRON MONUMENT COVER

(APPROXIMATE WEIGHT - 95 LBS.)

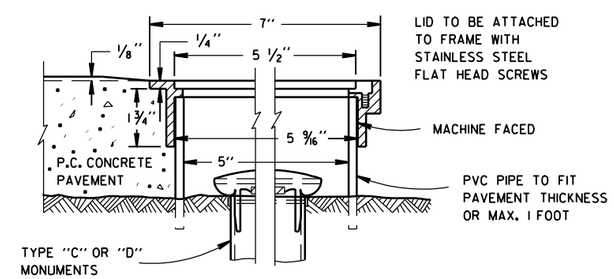

SECTION B-B SECTION A-A

ALUMINUM MONUMENT COVER

(APPROXIMATE WEIGHT 2 LBS)

(FOR CONCRETE PAVEMENT ONLY)

LANDMARK REFERENCE MONUMENTS AND COVERS

STATE OF WISCONSIN
DEPARTMENT OF TRANSPORTATION

APPROVED 9/22/99 DATE — CHIEF ROADWAY DEVELOPMENT ENGINEER

FHWA

6

S.D.D. 16 A 1-6

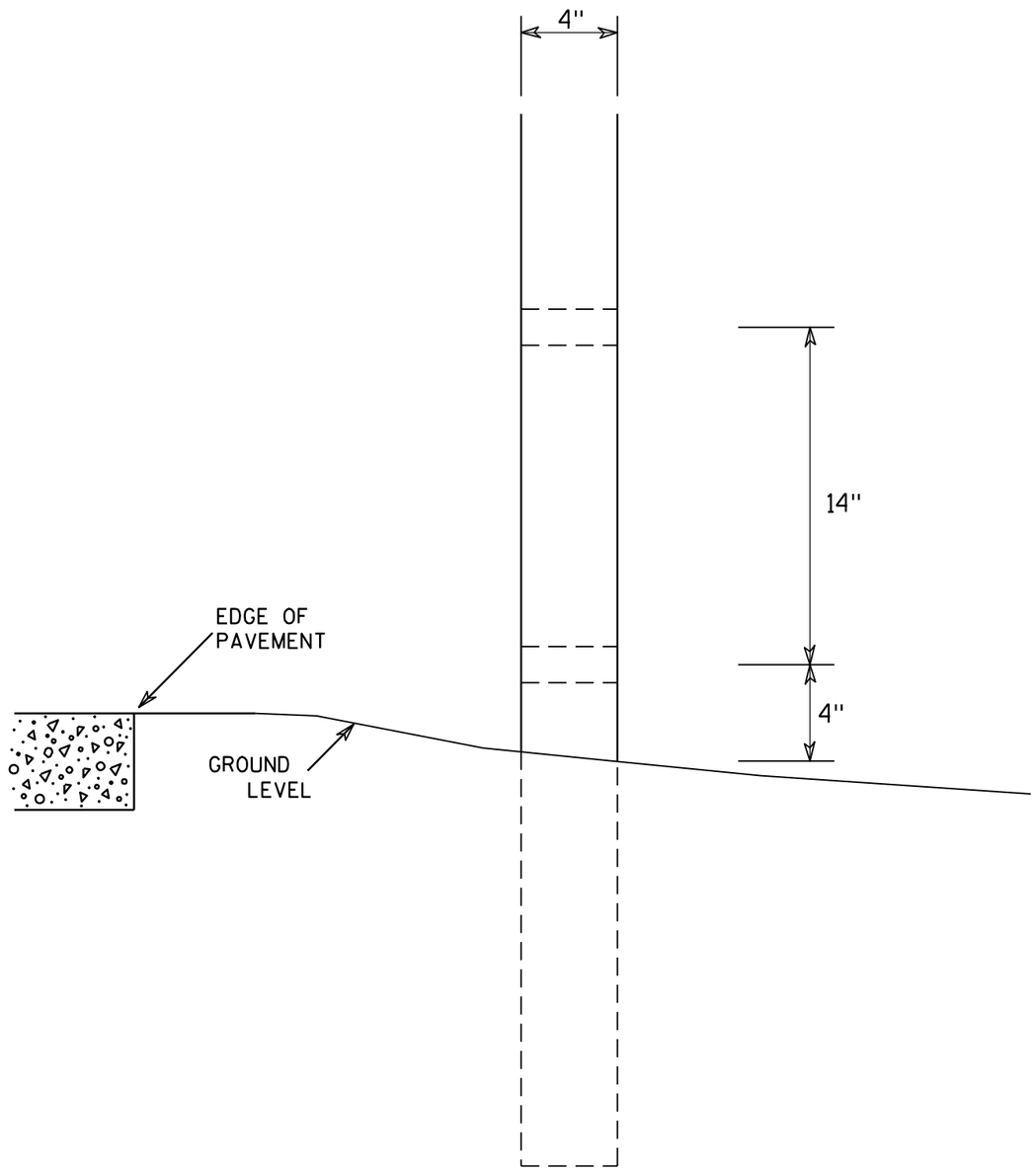

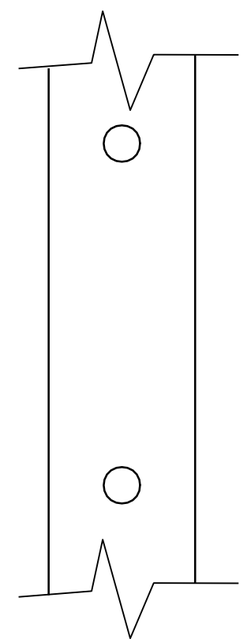

SIDE VIEW

GENERAL NOTES

1. All 4 x 6 Wood Posts shall be modified by having two 1½" diameter holes drilled perpendicular to the roadway centerline.

4 X 6 WOOD POST MODIFICATIONS

WISCONSIN DEPT OF TRANSPORTATION

APPROVED Chester J Spang for State Traffic Engineer

DATE 3/27/97 PLATE NO. A4-11.2

PROJECT NO:	HWY:	COUNTY:		SHEET NO: 48	E

URBAN AREA

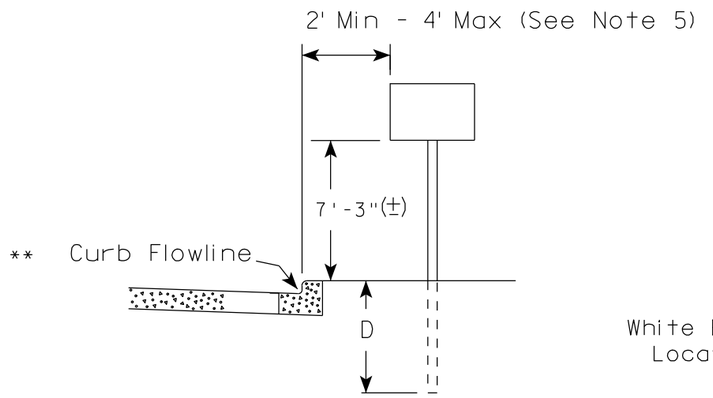

RURAL AREA (See Note 2)

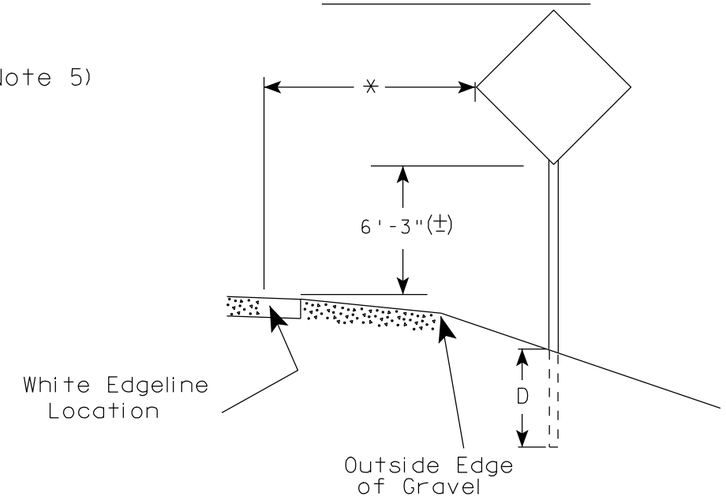

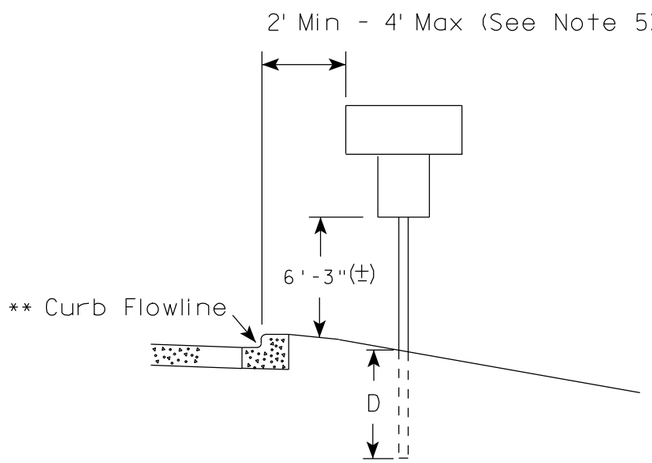

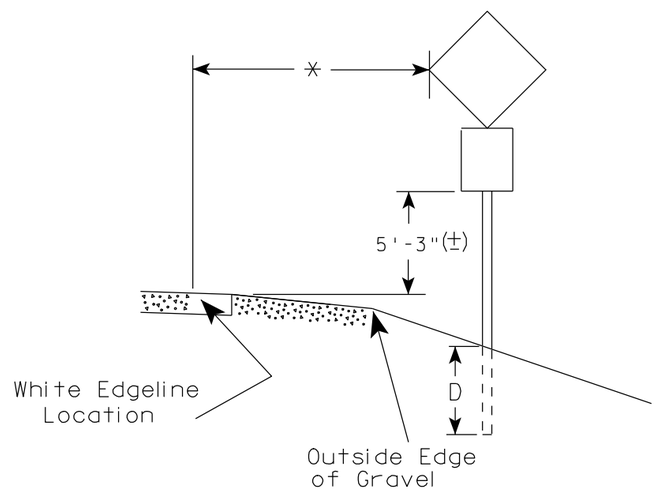

** The existence of curb and gutter does not in itself mandate the vertical clearance illustrated. That height is typically measured where there is sidewalk adjacent to the roadway or parking is permitted. In the absence of sidewalk vertical clearance is measured from the top of the curb. Offset of signs is measured from the flow line.

* 6 feet from edge of a paved shoulder or 12 feet from the edge of pavement (edge line location) or 2 feet from outside edge of gravel, whichever is greater unless directed by project engineer.

GENERAL NOTES

1. Signs wider than 4 feet or larger than 20 sq. ft. shall be mounted on multiple posts. Refer to plate A4-4.
2. If signs are mounted on barrier wall, see A4-10 sign plate.
3. For expressways and freeways, mounting height is 7'- 3" (±) or 6'-3" (±) depending upon existence of a sub-sign.
4. Minimum mounting height for J assemblies (A4-5) is 7'-3" (±) or 6'-3" (±) per urban or rural detail respectively.
5. Minimum mounting height for signs mounted on traffic signal poles is 5'- 3" (±).
6. Offset distance shall be consistent with existing signs or consistent throughout length of project.
7. The (±) tolerance for mounting height is 3 inches.
8. Folding stop signs (R1-1F) shall be mounted at a height of 5'-3" (±) or as directed by the Engineer.
9. The Double Arrow sign (W12-1) shall be mounted at a height of 2'-3" (±). The Chevron sign (W1-8), Roundabout Chevron panel (R6-4B), Clearance Markers (W5-52), Mile Markers (D10 series) & End of Road Markers (W5-56 & W5-56A) shall be mounted at a height of 4'-3" (±).

POST EMBEDMENT DEPTH

Area of Sign Installation (Sq. Ft.)	D (Min)
20 or Less	4'
Greater than 20	5'

TYPICAL INSTALLATION OF PERMANENT TYPE II SIGNS ON SINGLE POSTS

WISCONSIN DEPT OF TRANSPORTATION

APPROVED Matthew R Rauch for State Traffic Engineer

DATE 9/21/2011 PLATE NO. A4-3.16

7

7

PROJECT NO:	HWY:	COUNTY:		SHEET NO: 49	E

URBAN AREA

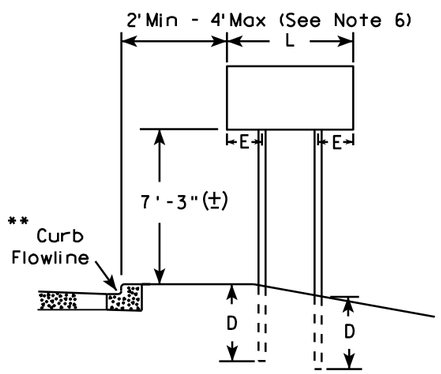

RURAL AREA (See Note 3)

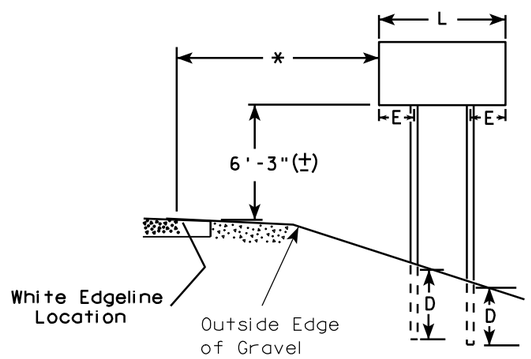

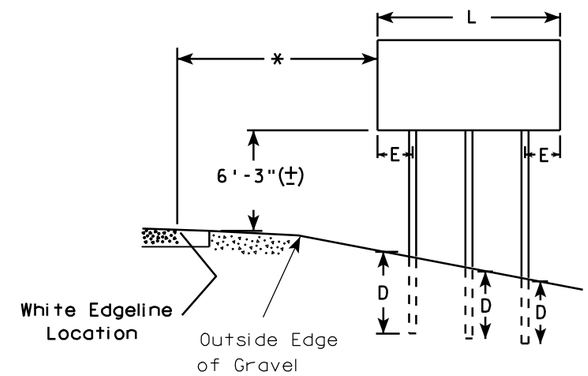

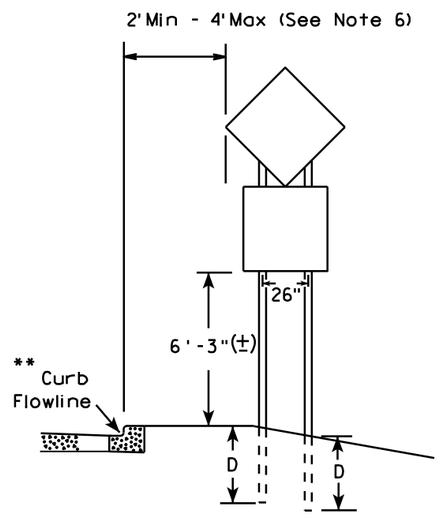

48" DIAMOND WARNING SIGN

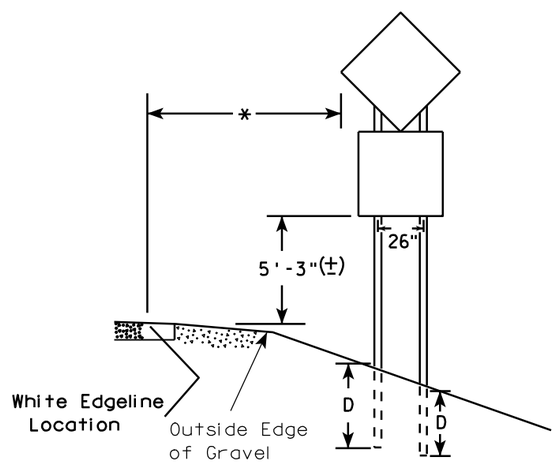

48" DIAMOND WARNING SIGN

GENERAL NOTES

1. For multiple post installations, individual post spacing shall be greater than 3'-6".
2. See tables below for required number of posts.
3. For expressways and freeways, mounting height is 7'-3" (±) or 6'-3" (±) depending upon existence of sub-sign.
4. The (±) tolerance for mounting height is 3 inches.
5. Minimum mounting height for J assemblies (A4-5) is 7'-3" (±) or 6'-3" (±) per urban or rural detail respectively.
6. Offset distance shall be consistent with existing signs or consistent throughout length of project.
7. Folding stop signs (R1-1F) shall be mounted at a height of 5'-3" (±) or as directed by the engineer.
8. The Double Arrow sign (W12-1) shall be mounted at a height of 2'-3" (±). The Chevron sign (W1-8), Roundabout Chevron panel (R6-4B), Clearance Markers (W5-52), Mile Markers (D10 series) & End of Road Markers (W5-56 & W5-56A) shall be mounted at a height of 4"-3" (±).

* 6 feet from edge of a paved shoulder or 12 feet from the edge of pavement (edge line location) or 2 feet from outside edge of gravel, whichever is greater unless directed by project engineer.

** The existence of curb and gutter does not in itself mandate the vertical clearance illustrated. That height is typically measured where there is sidewalk adjacent to the roadway or parking is permitted. In the absence of sidewalk vertical clearance is measured from the top of the curb. Offset of signs is measured from the flow line.

*** See A4-3 sign plate for signs 4' or less in width or 20 S.F. or less in area.

SIGN SHAPE OTHER THAN DIAMOND (TWO POSTS REQUIRED)	
L	E
*** Greater than 48" Less than 60"	12"
60" to 120"	L/5

SIGN SHAPE OTHER THAN DIAMOND (THREE POSTS REQUIRED)	
L	E
Greater than 120" less than 168"	12"

SIGN SHAPE OTHER THAN DIAMOND (FOUR POSTS REQUIRED)	
L	E
168" and greater	12"

POST EMBEDMENT DEPTH

Area of Sign Installation (Sq. Ft.)	D (Min)
20 or Less	4'
Greater than 20	5'

TYPICAL INSTALLATION OF TYPE II SIGNS ON MULTIPLE POSTS

WISCONSIN DEPT OF TRANSPORTATION

APPROVED Matthew R Rauch
for State Traffic Engineer

DATE 9/21/2011 PLATE NO. A4-4.11

7

7

PROJECT NO:	HWY:	COUNTY:		SHEET NO: 50	E

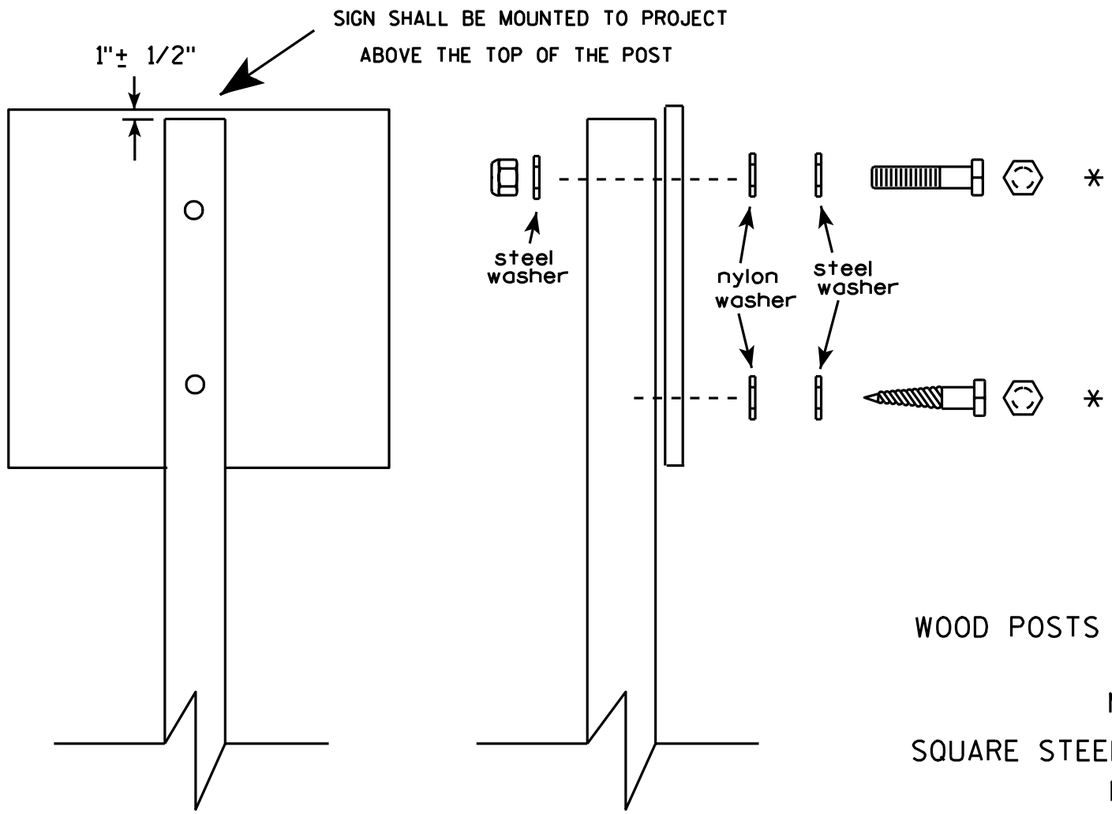

Nuts, bolts and lags used for mounting signs shall have hexagonal heads and shall be either :

a. Hot dip galvanized in accordance with ASTM Designation: A 153, Class D, or SC 3

b. Electro-galvanized in accordance with ASTM Designation : B 633, TYPE III, SC 3.

Threads on bolts and nuts shall be manufactured with sufficient allowance for the cadmium plate or galvanized coating to permit the nuts to run freely on the bolts.

WOOD POSTS (4" x 4" or 4" x 6")

LAG SCREWS - 3/8" X 3"

MACHINE BOLTS - 5/16" X 6-1/2" or 7" Length w/ nuts

SQUARE STEEL POSTS (2" x 2")

MACHINE BOLTS - 3/8" X 3-1/4" Length w/ nuts

RIVETS - 9/32 " (6605-9-6) BULB-TITE, TRI-FOLD, ALUMINUM BODY/MANDREL O.D. FLANGE .720-.765 INCH, GRIP RANGE .042-.375 INCH

WASHERS (ALL POSTS) -

1-1/4" O.D. X 3/8" I.D. X 1/16" STEEL

1-1/4" O.D. X 3/8" I.D. X .080 NYLON for all Type H signs.

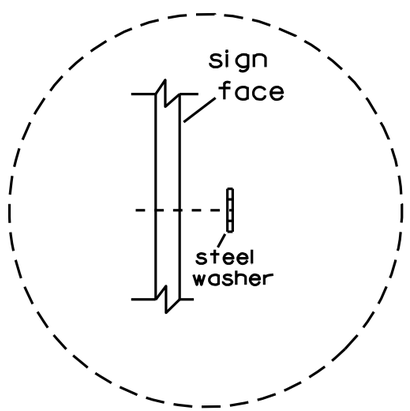

Washer Placement when Sign Has Other Than Type H or Type F Face

* Two different fastening systems are shown for illustration purposes. On any individual sign, either one or the other system shall be used. Actual number of fasteners per sign varies with the sign area, but normally there are two. For a single post installation, all signs greater than 9 sq. ft. require the use of 3 fasteners.

ATTACHMENT OF SIGNS TO POSTS

WISCONSIN DEPT OF TRANSPORTATION

APPROVED Matthew R Rauch
for State Traffic Engineer

DATE 3/23/10 PLATE NO. A4-8.7

7

7

PROJECT NO:

SHEET NO: 51 E

BRACE BANDING

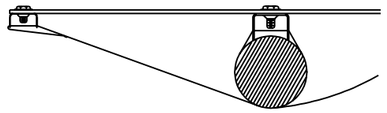

DETAIL C
CADMIUM PLATED STEEL BOLT
THROUGH BLACK BORDER

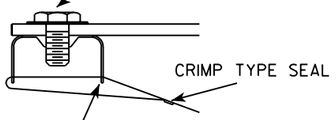

DETAIL C

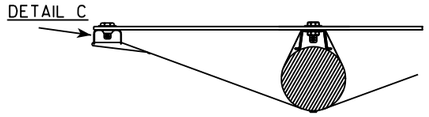

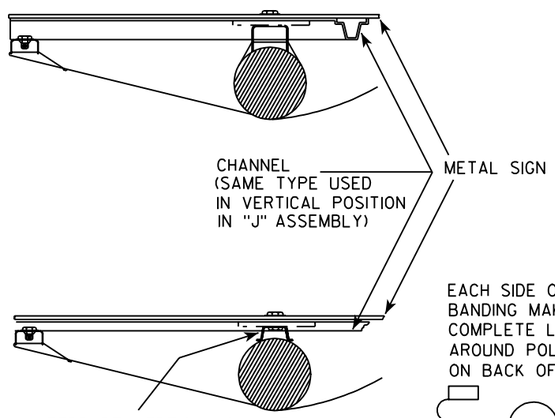

EACH SIDE OF BRACE
BANDING MAKES ONE
COMPLETE LOOP
AROUND POLE-SEAL
ON BACK OF POLE

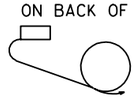

BRACKET BANDING

SINGLE SIGN

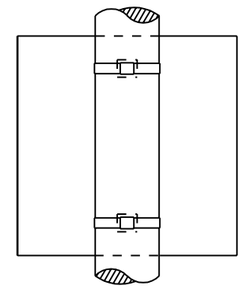

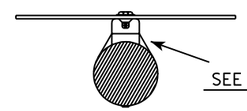

SEE DETAIL A

"J" ASSEMBLY

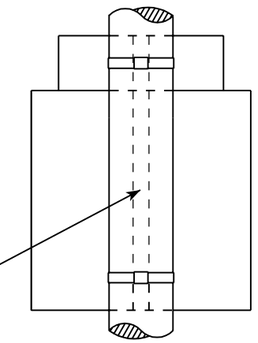

CHANNEL
SEE TYPICAL PANEL
INSTALLATION SHEET

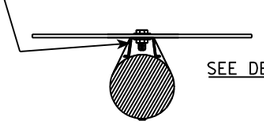

SEE DETAIL B

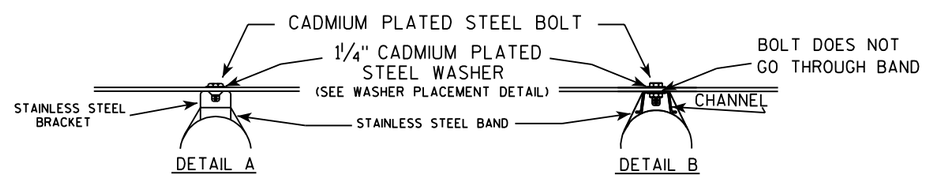

GENERAL NOTES

1. Signs 4' or greater in width shall have one brace band installed at the center of the sign.
2. Signs 3' or greater in height shall have three bracket bands installed. Signs less than 3' in height shall have two bracket bands installed.
3. Banding and assembly bracket shall be stainless steel. All bands shall be ¾" in width and 0.025" thickness.

WASHER PLACEMENT

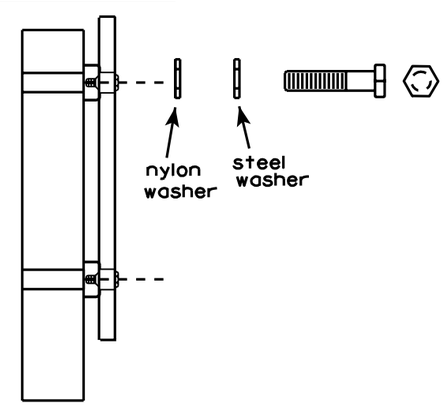

WASHERS (ALL POSTS) -
1-1/4" O.D. X ⅜" I.D. X 1/16" STEEL
1-1/4" O.D. X ⅜" I.D. X .080 NYLON
FOR ALL TYPE H SIGNS

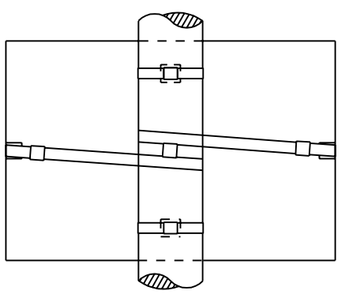

BRACE BANDING

BRACE BANDING SHALL BE TIGHTENED FIRMLY BUT NOT SO TIGHT AS TO APPRECIABLY CURVE FACE OF SIGN.

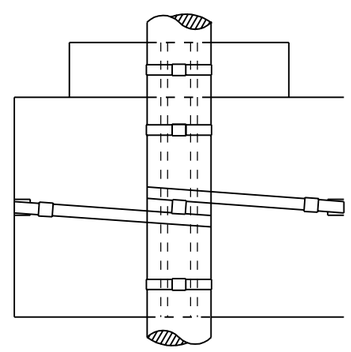

STANDARD SIGN
SIGN BANDING DETAILS

WISCONSIN DEPT OF TRANSPORTATION

APPROVED Matthew R Rauch
for State Traffic Engineer

DATE 11/08/05 PLATE NO. A5-9.2

PROJECT NO:	HWY:	COUNTY:		SHEET NO: 52	E

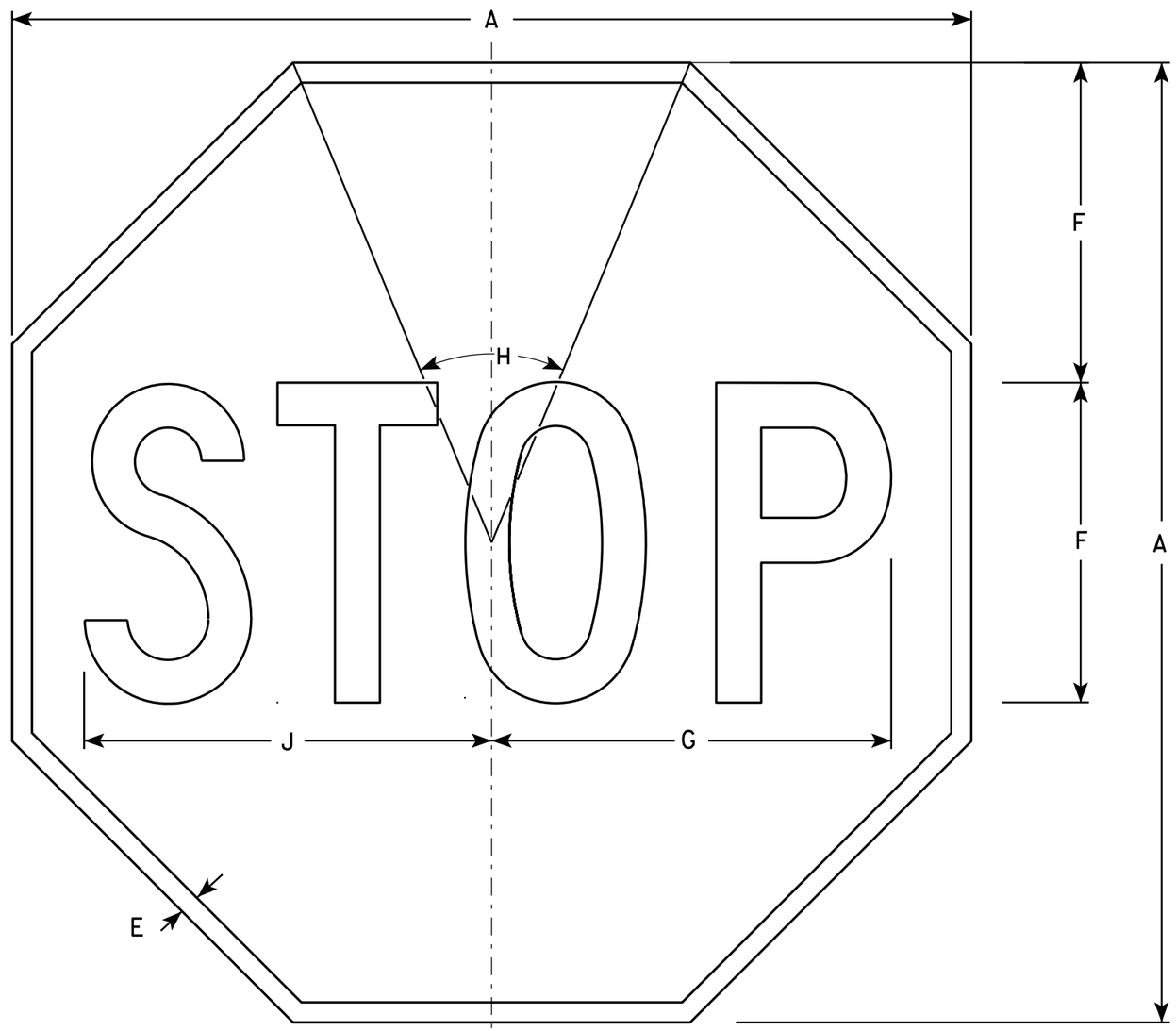

R1-1

NOTES

1. Sign is Type II - Type H Reflective - reference WIS DOT Standard Specification for HIGHWAY and STRUCTURE CONSTRUCTION latest edition.
2. Color:
   Background - Red
   Message - White
3. Message Series - C

SIZE	A	B	C	D	E	F	G	H	I	J	K	L	M	N	O	P	Q	R	S	T	U	V	W	X	Y	Z	Area sq. ft.
1	24				3/8	8	10	45°		10 1/4																	3.31
2S	30				5/8	10	12 1/2	45°		12 3/4																	5.18
2M	36				3/4	12	15	45°		15 3/8																	7.46
3	36				3/4	12	15	45°		15 3/8																	7.46
4	48				1	16	20	45°		20 1/2																	13.25
5	48				1	16	20	45°		20 1/2																	13.25
6	18				3/8	6	7 3/4	45°		7 3/4																	1.86
7	12				1/4	4	5	45°		5 1/8																	0.78

STANDARD SIGN
R1-1

WISCONSIN DEPT OF TRANSPORTATION

APPROVED Matthew R Rauch
for State Traffic Engineer

DATE 12/03/10 PLATE NO. R1-1.12

PROJECT NO: | HWY: | COUNTY: | SHEET NO: 53 | E

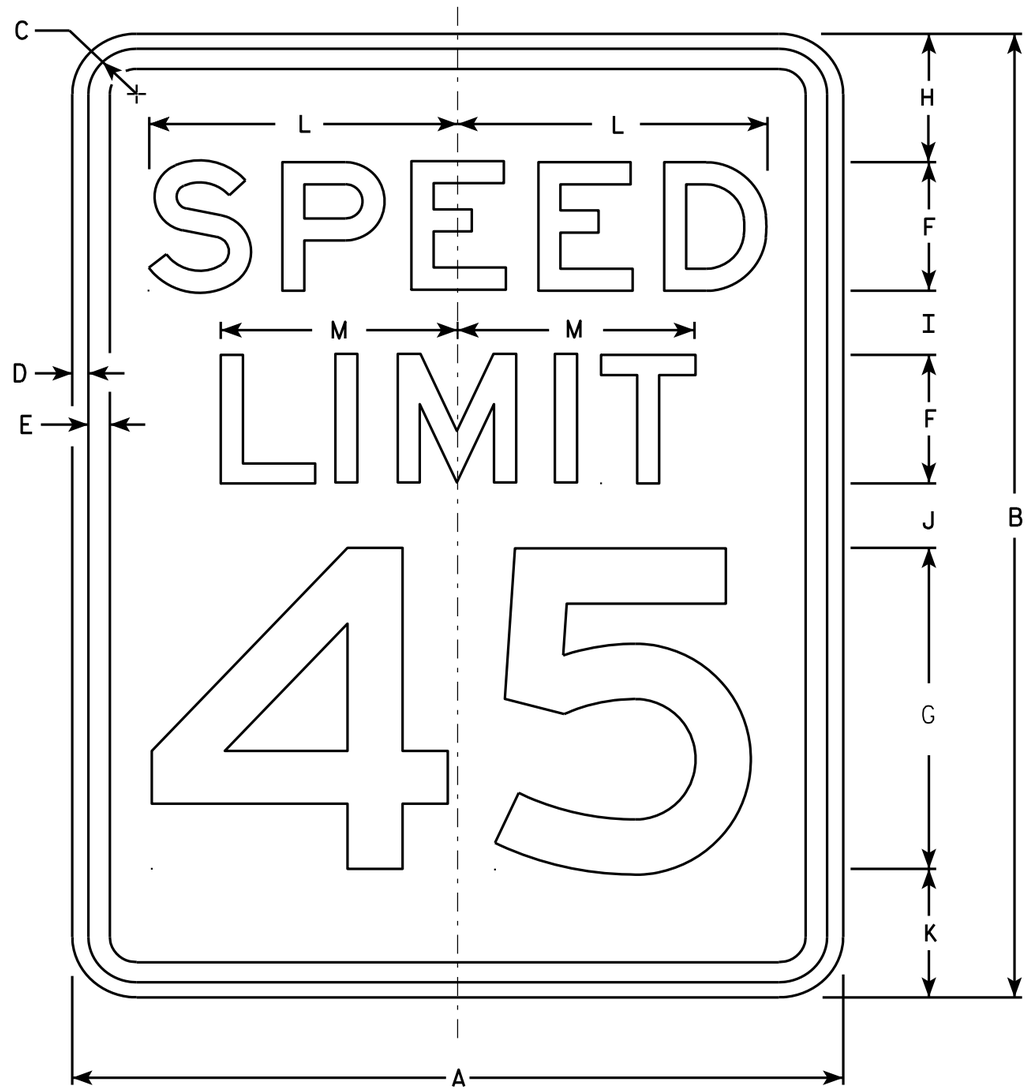

R2-1

NOTES

1. Sign is Type II - Type H Reflective - reference WIS DOT Standard Specification for HIGHWAY and STRUCTURE CONSTRUCTION latest edition.
2. Color:
   Background - White
   Message - Black
3. Message Series - E
4. Corners may be square or rounded when base material is plywood but borders shall be rounded as shown. When base material is metal, the corners and borders shall be rounded.
5. Substitute appropriate numerals and optically adjust spacing to achieve proper balance.

SIZE	A	B	C	D	E	F	G	H	I	J	K	L	M	N	O	P	Q	R	S	T	U	V	W	X	Y	Z	Area sq. ft.
1	18	24	1 1/8	3/8	1/2	3	8	3	2	2	3	7 1/4	5 1/2														3.0
2S	24	30	1 1/8	3/8	1/2	4	10	3	2 1/4	3 3/8	3 3/8	9 5/8	7 3/8														5.0
2M	30	36	1 3/8	1/2	5/8	5	12	5	2 1/2	2 1/2	4	12	9 1/4														7.5
3	36	48	1 3/8	1/2	5/8	6	14	6	5	5	6	14 3/8	11														12.0
4	36	48	1 3/8	1/2	5/8	6	14	6	5	5	6	14 3/8	11														12.0
5	48	60	2 1/4	3/4	1	8	20	6	4 1/2	6 3/4	6 3/4	19 1/4	14 5/8														20.0

STANDARD SIGN
R2-1

WISCONSIN DEPT OF TRANSPORTATION

APPROVED Matthew R Rauch
for State Traffic Engineer

DATE 5/26/10 PLATE NO. R2-1.13

PROJECT NO: | HWY: | COUNTY: | SHEET NO: 54 | E

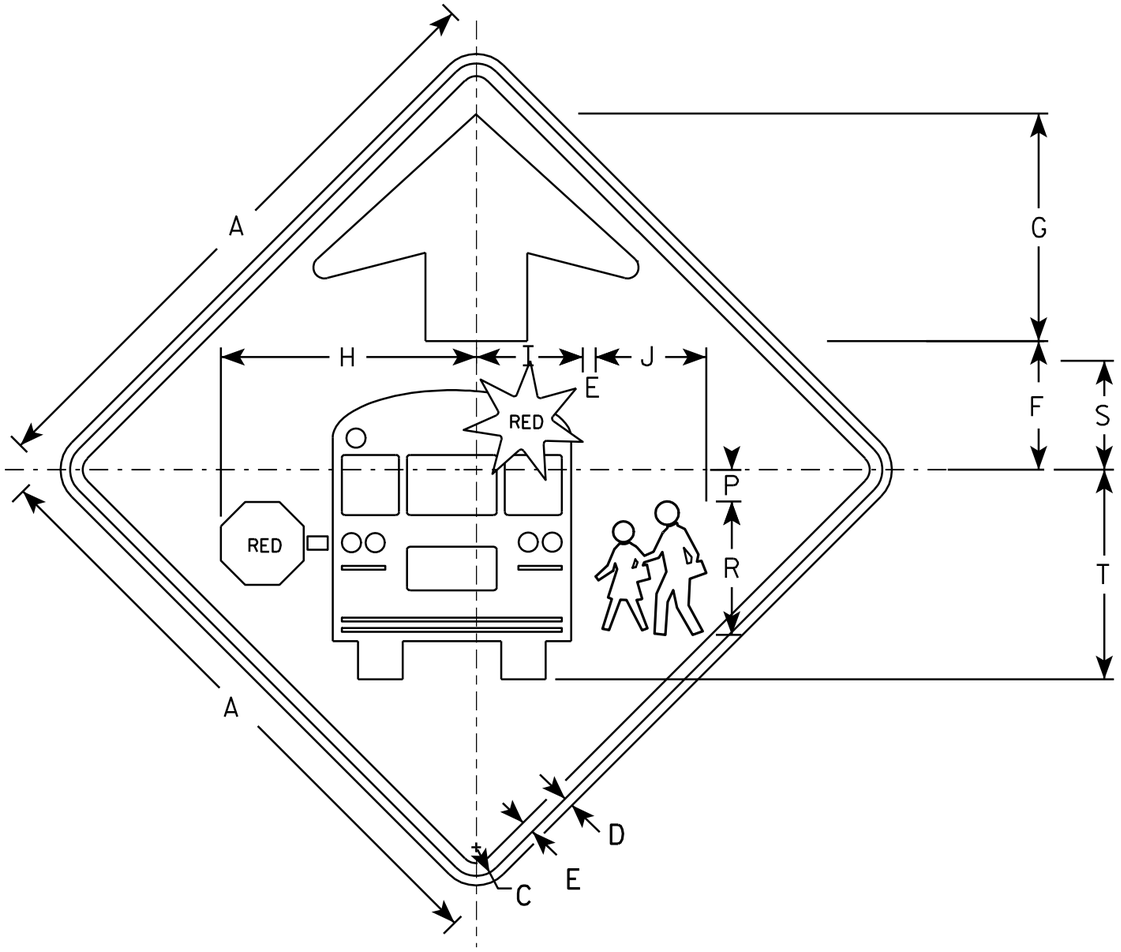

S3-1

NOTES

1. All Signs Type II - Type F Reflective - reference WIS DOT Standard Specification for HIGHWAY and STRUCTURE CONSTRUCTION latest edition.
2. Color:
   Background - YELLOW-GREEN
   Message - BLACK except as noted
   Circles except PEDS- RED BACKGROUND
3. Corners may be square or rounded when base material is plywood but borders shall be rounded as shown. When base material is metal, the corners and borders shall be rounded.

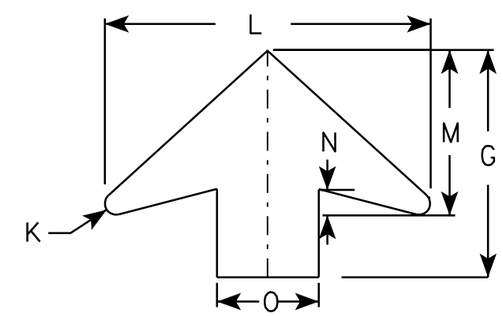

ARROW DETAIL

SIZE	A	B	C	D	E	F	G	H	I	J	K	L	M	N	O	P	Q	R	S	T	U	V	W	X	Y	Z	Area sq. ft.
1	30		1 3/8	1/2	5/8	6 1/4	11 1/4	12 1/2	5 1/4	5 1/2	1/2	16	8	1 1/4	5	1 1/2		6 5/8	5 3/8	10 3/8							6.25
2	36		1 5/8	5/8	3/4	7 1/2	13 1/2	15 1/8	6 1/4	6 1/2	5/8	19 1/4	9 3/4	1 5/8	6	1 7/8		7 7/8	6 3/8	12 3/8							9.0
3	48		2 1/4	3/4	1	10	17 7/8	20 1/8	8 3/8	8 3/4	7/8	25 5/8	13	2	8	2 1/2		10 1/2	8 1/2	16 1/2							16.0
4	48		2 1/4	3/4	1	10	17 7/8	20 1/8	8 3/8	8 3/4	7/8	25 5/8	13	2	8	2 1/2		10 1/2	8 1/2	16 1/2							16.0
5																											

STANDARD SIGN
S3-1

WISCONSIN DEPT OF TRANSPORTATION

APPROVED Matthew R Rauch
for State Traffic Engineer

DATE 6/8/10 PLATE NO. S3-1.6

PROJECT NO:

SHEET NO: 55 E

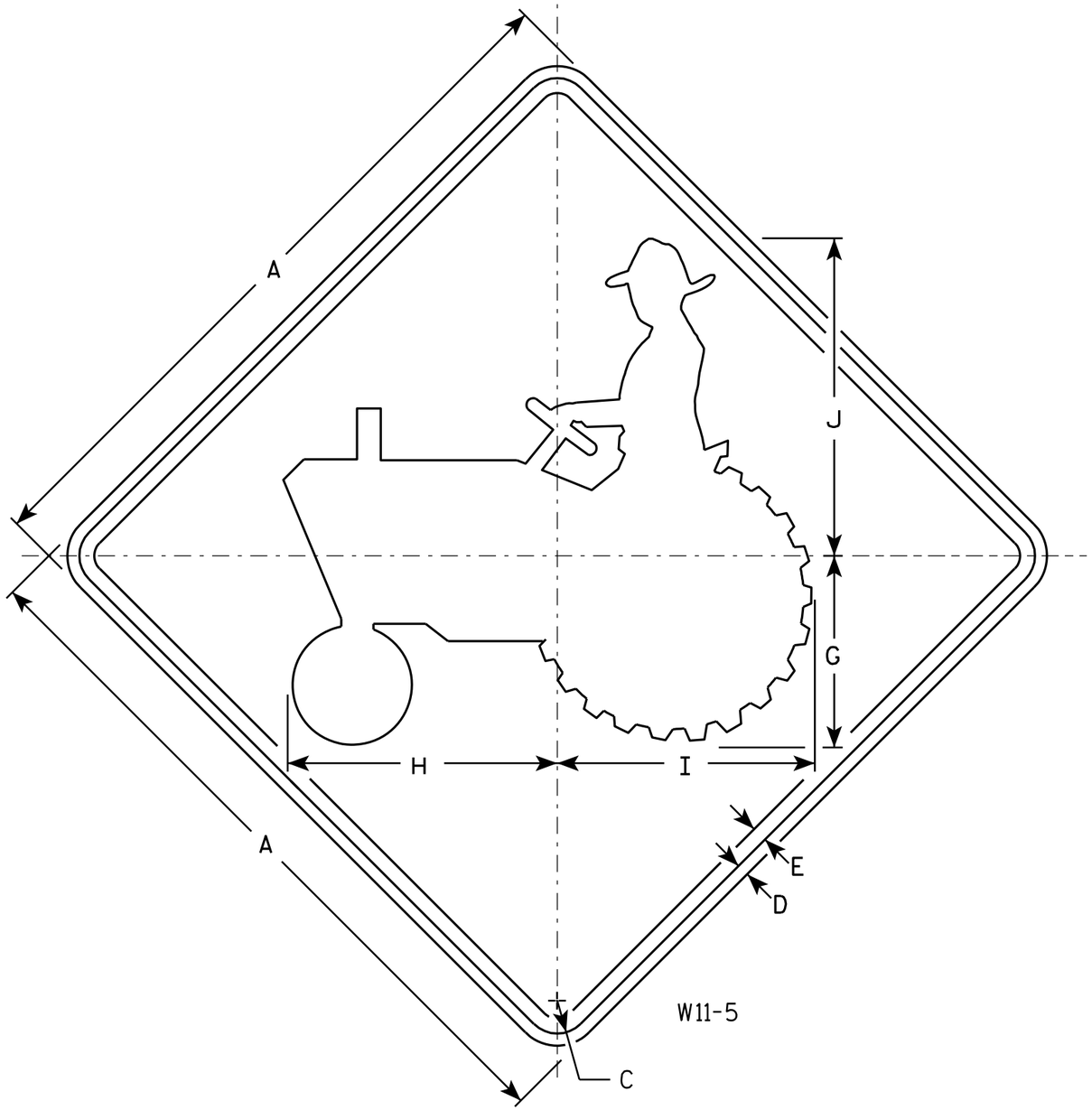

NOTES

1. Sign is Type II - Type H Reflective - reference WIS DOT Standard Specification for HIGHWAY and STRUCTURE CONSTRUCTION latest edition.
2. Color:
   Background - Yellow
   Message - Black
3. Corners may be square or rounded when base material is plywood but borders shall be rounded as shown. When base material is metal, the corners and borders shall be rounded.

SIZE	A	B	C	D	E	F	G	H	I	J	K	L	M	N	O	P	Q	R	S	T	U	V	W	X	Y	Z	Area sq. ft.
1	24		1 1/8	3/8	1/2		6 3/8	9	8 5/8	10 5/8																	4.0
2S	30		1 3/8	1/2	5/8		8	11 1/4	10 3/4	13 1/4																	6.25
2M	30		1 3/8	1/2	5/8		8	11 1/4	10 3/4	13 1/4																	6.25
3																											
4	36		1 5/8	5/8	3/4		9 5/8	13 1/2	12 7/8	16																	9.0
5	48		2 1/4	3/4	1		12 3/4	18	17 1/4	21 1/8																	16.0

STANDARD SIGN
W11-5

WISCONSIN DEPT OF TRANSPORTATION

APPROVED Matthew R Rauch
for State Traffic Engineer
DATE 3/16/11 PLATE NO. W11-5.5

PROJECT NO:	HWY:	COUNTY:		SHEET NO: 56	E

NOTES

1. Sign is Type II - Type H Reflective - reference WIS DOT Standard Specification for HIGHWAY and STRUCTURE CONSTRUCTION latest edition.
2. Color:
   Background - Yellow
   Message - Black
3. Corners may be square or rounded when base material is plywood but borders shall be rounded as shown. When base material is metal, the corners and borders shall be rounded.
4. W1-2L is the same as W1-2R except the arrow is reversed along the vertical centerline.

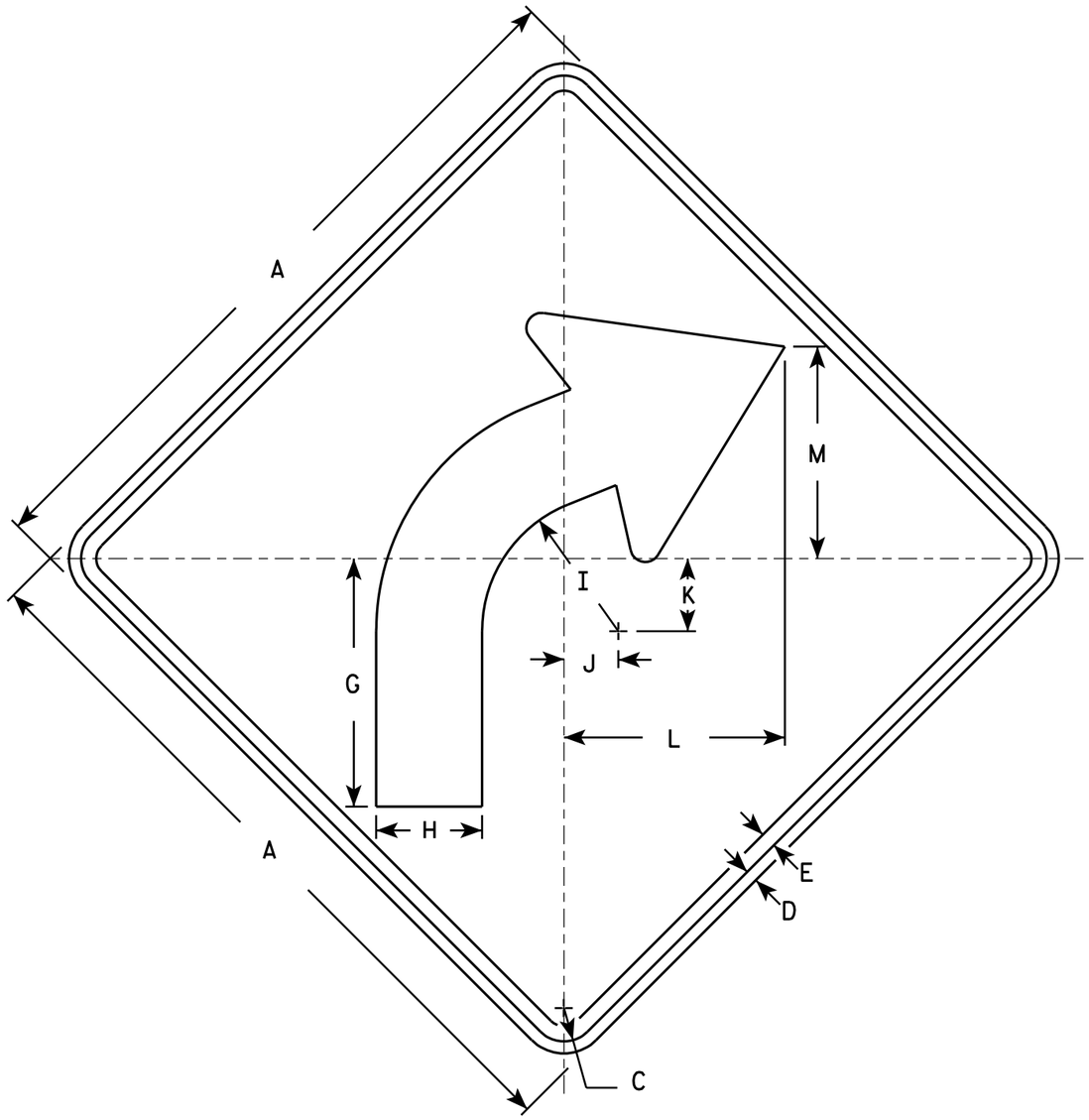

W1-2R

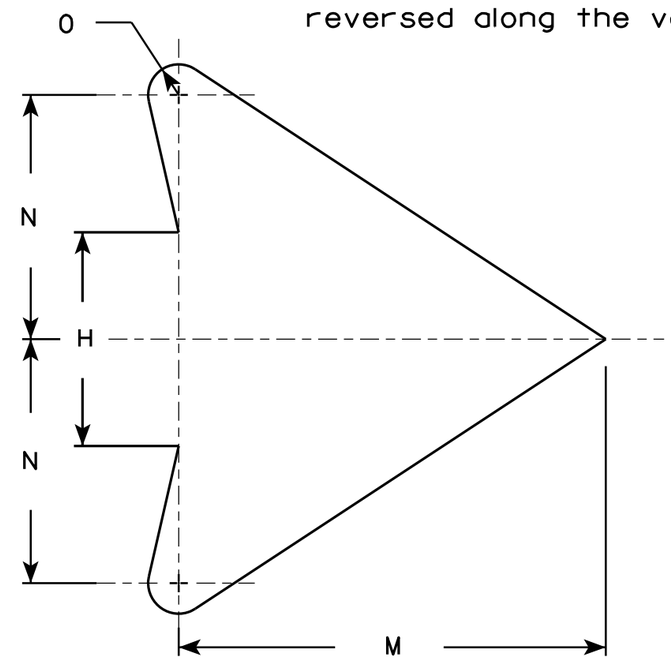

ARROW DETAIL

SIZE	A	B	C	D	E	F	G	H	I	J	K	L	M	N	O	P	Q	R	S	T	U	V	W	X	Y	Z	Area sq. ft.
1	24		1 1/8	3/8	1/2		8 1/4	3 1/2	4 1/2	1 3/4	2 3/8	7 1/4	7	4	1/2												4.0
2S	30		1 3/8	1/2	5/8		10 1/4	4 3/8	5 5/8	2 1/4	3	9 1/8	8 3/4	5	5/8												6.25
2M	36		1 5/8	5/8	3/4		12 3/8	5 1/4	6 3/4	2 5/8	3 1/2	10 7/8	10 1/2	6	3/4												9.0
3	36		1 5/8	5/8	3/4		12 3/8	5 1/4	6 3/4	2 5/8	3 1/2	10 7/8	10 1/2	6	3/4												9.0
4	36		1 5/8	5/8	3/4		12 3/8	5 1/4	6 3/4	2 5/8	3 1/2	10 7/8	10 1/2	6	3/4												9.0
5	48		2 1/4	3/4	1		16 1/2	7	9	3 1/2	4 5/8	14 1/2	14	8	1												16.0

STANDARD SIGN
W1-2

WISCONSIN DEPT OF TRANSPORTATION

APPROVED Matthew R Rauch
for State Traffic Engineer

DATE 4/18/11 PLATE NO. W1-2.9

PROJECT NO:	HWY:	COUNTY:		SHEET NO: 57	E

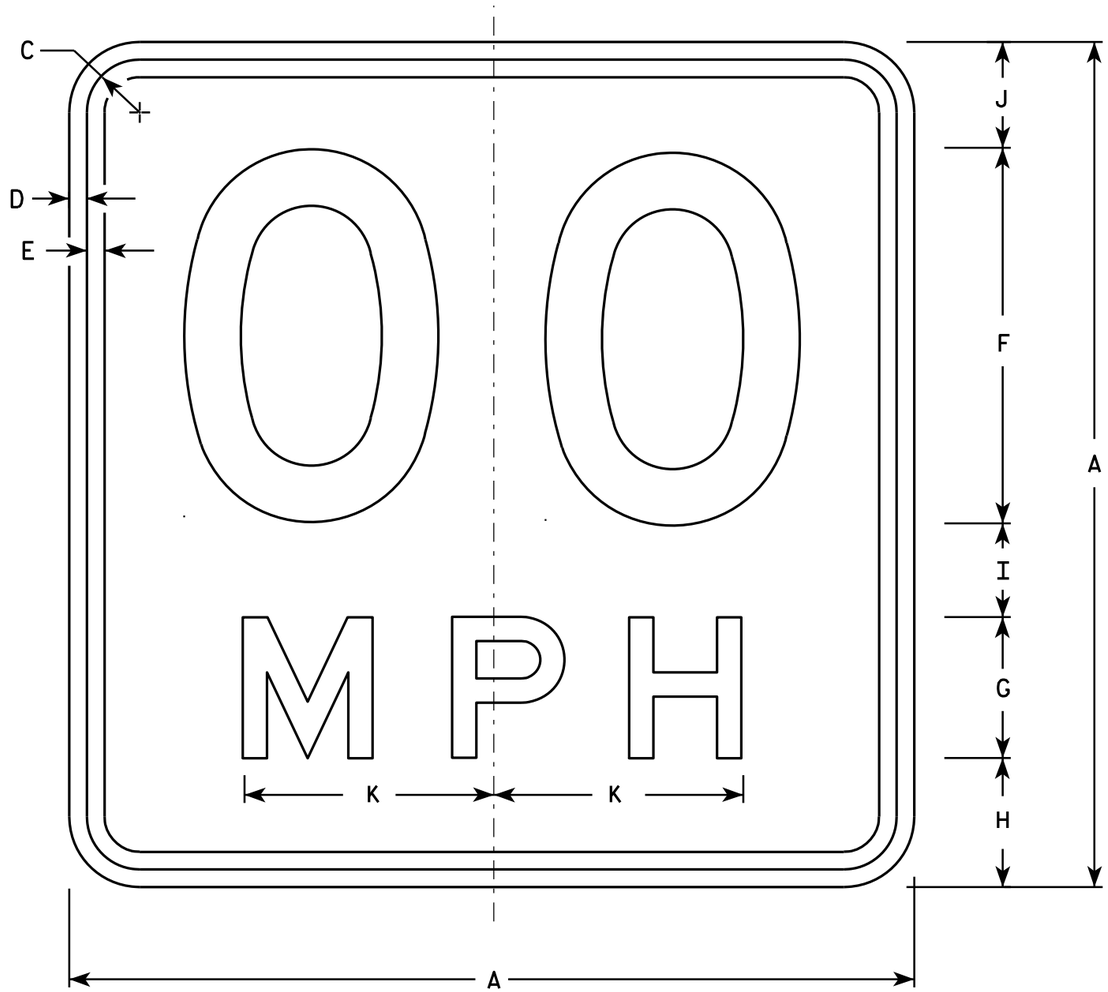

W13-1

* For 30" x 30" Warning Signs, use 18" x 18" W13-1 signs.
For 36" x 36" Warning Signs, use 24" x 24" W13-1 signs.

NOTES

1. Sign is Type II - Type H Reflective - reference WIS DOT Standard Specification for HIGHWAY and STRUCTURE CONSTRUCTION latest edition.
2. Color:
   Background - Yellow
   Message - Black
3. Message Series - See Note 6
4. Corners may be square or rounded when base material is plywood but borders shall be rounded as shown. When base material is metal, the corners and borders shall be rounded.
5. Substitute appropriate numerals and optically space about centerline to achieve proper balance.
6. Line 1 is Series D
   Line 2 is Series E

SIZE	A	B	C	D	E	F	G	H	I	J	K	L	M	N	O	P	Q	R	S	T	U	V	W	X	Y	Z	Area sq. ft.
1	18		1 1/8	3/8	3/8	8	3	2 3/4	2	2 1/4	5 3/8																2.25
* 2S	18		1 1/8	3/8	3/8	8	3	2 3/4	2	2 1/4	5 3/8																2.25
* 2M	18		1 1/8	3/8	3/8	8	3	2 3/4	2	2 1/4	5 3/8																2.25
3	24		1 1/8	3/8	1/2	10	4	4	2 3/4	3 1/4	6 5/8																4.00
4	36		1 5/8	5/8	3/4	16	6	5 1/2	4	4 1/2	10 5/8																9.00
5	36		1 5/8	5/8	3/4	16	6	5 1/2	4	4 1/2	10 5/8																9.00

STANDARD SIGN
W13-1

WISCONSIN DEPT OF TRANSPORTATION

APPROVED Matthew R Rauch
for State Traffic Engineer

DATE 3/16/11 PLATE NO. W13-1.15

PROJECT NO:	HWY:	COUNTY:		SHEET NO: 58	E

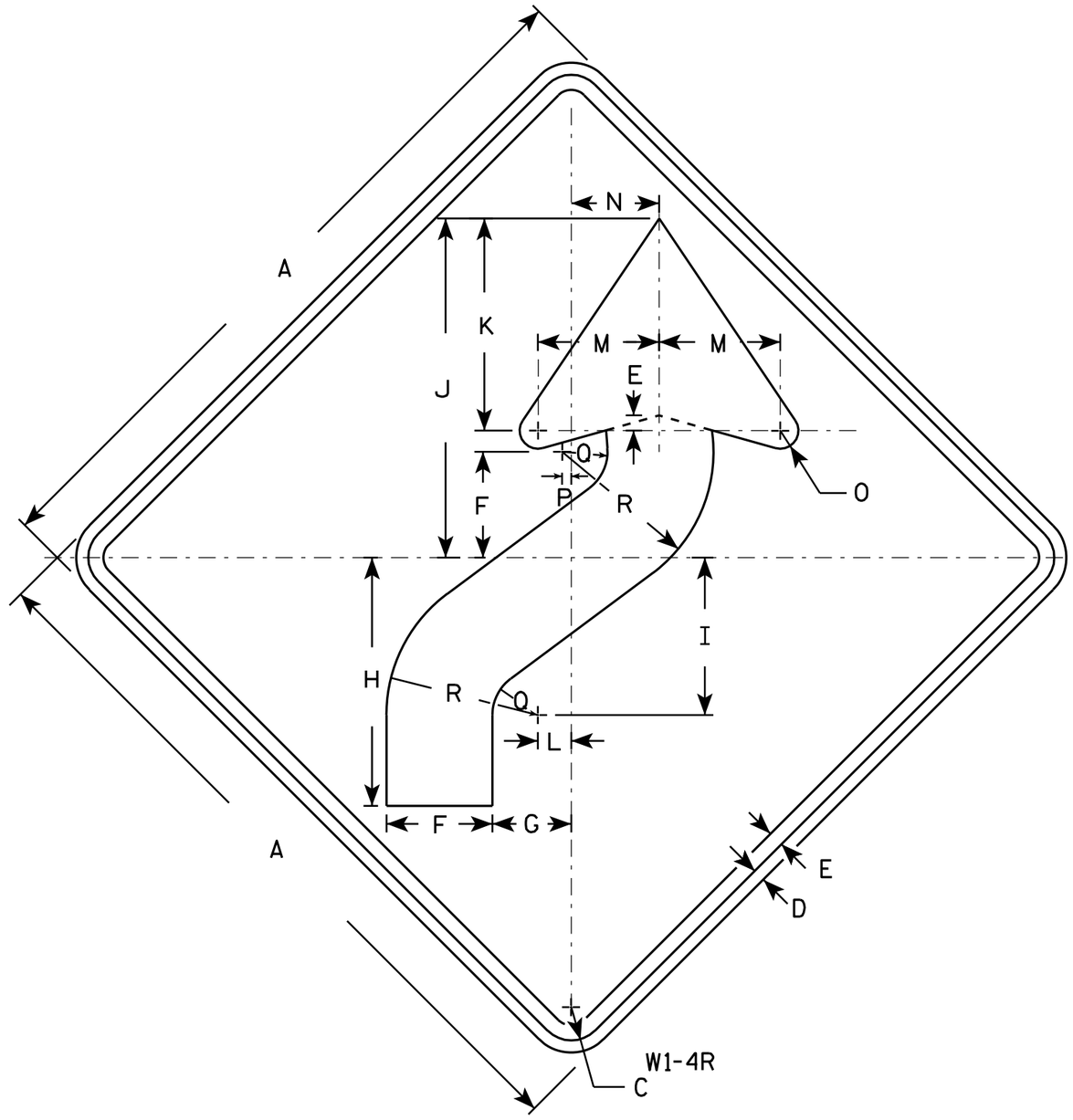

NOTES

1. Sign is Type II - Type H Reflective - reference WIS DOT Standard Specification for HIGHWAY and STRUCTURE CONSTRUCTION latest edition.
2. Color:
   Background - Yellow
   Message - Black
3. Corners may be square or rounded when base material is plywood but borders shall be rounded as shown. When base material is metal, the corners and borders shall be rounded.
4. W1-4L is the same as W1-4R except the arrow is reversed along the vertical centerline.

SIZE	A	B	C	D	E	F	G	H	I	J	K	L	M	N	O	P	Q	R	S	T	U	V	W	X	Y	Z	Area sq. ft.
1	24		1 1/8	3/8	1/2	3 1/2	2 5/8	8 1/4	5 1/4	11 1/4	7	1 1/8	4	3	5/8	1/4	1 1/2	5									4.0
2S	30		1 3/8	1/2	5/8	4 3/8	3 1/4	10 1/4	6 1/2	14	8 3/4	1 3/8	5	3 5/8	3/4	3/8	1 7/8	6 1/4									6.25
2M	36		1 5/8	5/8	3/4	5 1/4	4	12 3/8	7 7/8	16 7/8	10 1/2	1 5/8	6	4 1/2	1	1/2	2 1/4	7 1/2									9.0
3	36		1 5/8	5/8	3/4	5 1/4	4	12 3/8	7 7/8	16 7/8	10 1/2	1 5/8	6	4 1/2	1	1/2	2 1/4	7 1/2									9.0
4	36		1 5/8	5/8	3/4	5 1/4	4	12 3/8	7 7/8	16 7/8	10 1/2	1 5/8	6	4 1/2	1	1/2	2 1/4	7 1/2									9.0
5	48		2 1/4	3/4	1	7	5 1/4	16 1/2	10 1/2	22 1/2	14	2 1/4	8	6	1 1/4	5/8	3	10									16.0

STANDARD SIGN
W1-4

WISCONSIN DEPT OF TRANSPORTATION

APPROVED Matthew R Rauch
for State Traffic Engineer

DATE 4/18/11 PLATE NO. W1-4.10

PROJECT NO: | HWY: | COUNTY: | SHEET NO: 59 | E

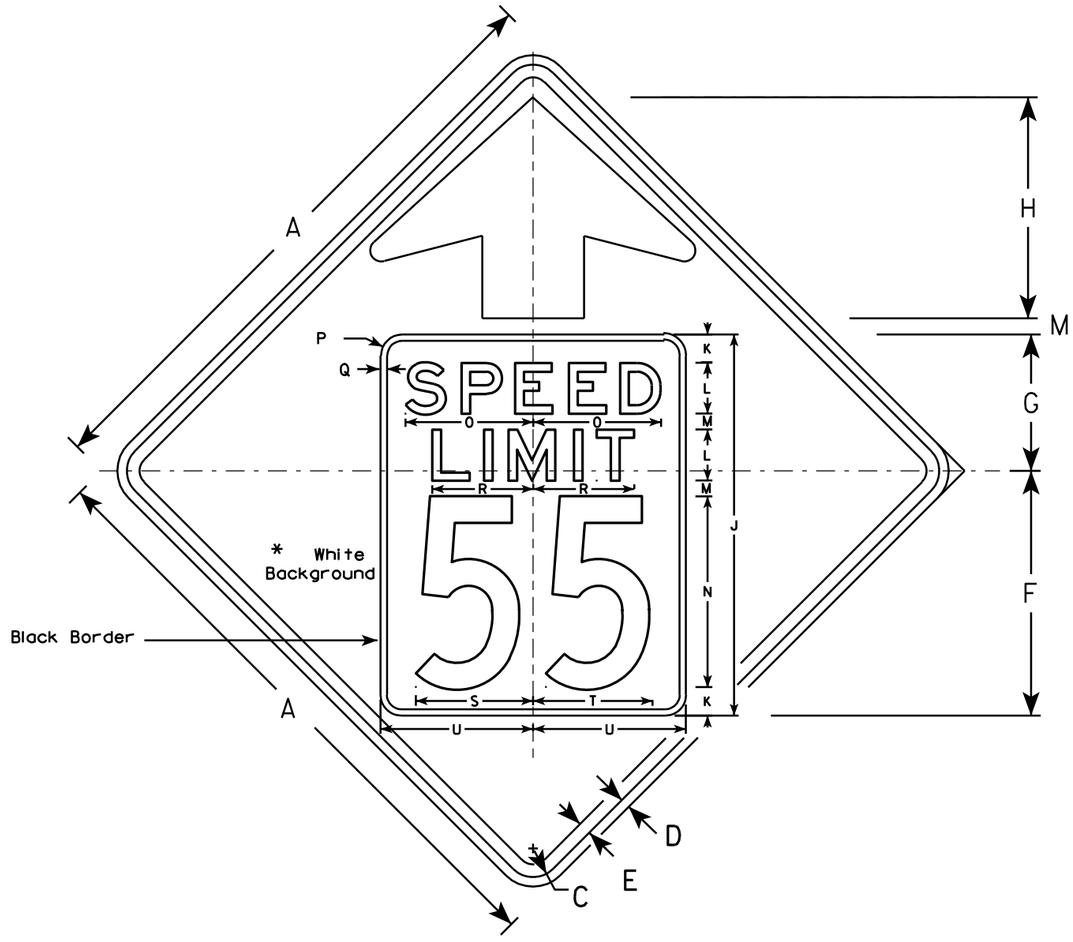

W3-5

NOTES

1. All Signs Type II - Type H Reflective - reference WIS DOT Standard Specification for HIGHWAY and STRUCTURE CONSTRUCTION latest edition.
2. Color: *
   Background - YELLOW*
   Message - BLACK
3. Message Series - C for numbers Series E for wording
4. Substitute appropriate numerals and optically adjust spacing to achieve proper balance

*Speed Limit Sign shall have a White Background

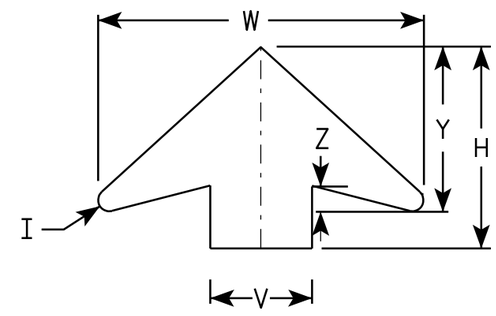

ARROW DETAIL

SIZE	A	B	C	D	E	F	G	H	I	J	K	L	M	N	O	P	Q	R	S	T	U	V	W	X	Y	Z	Area sq. ft.
1																											
2S	36		1 5/8	5/8	3/4	14 1/2	9 1/2	11 1/2	5/8	24	2	3	1	12	7 1/8	1 1/2	3/8	5 3/4	7 1/4	7 1/8	9	6	19 1/4		9 3/4	1 5/8	9.0
2M	36		1 5/8	5/8	3/4	14 1/2	9 1/2	11 1/2	5/8	24	2	3	1	12	7 1/8	1 1/2	3/8	5 3/4	7 1/4	7 1/8	9	6	19 1/4		9 3/4	1 5/8	9.0
3	36		1 5/8	5/8	3/4	14 1/2	9 1/2	11 1/2	5/8	24	2	3	1	12	7 1/8	1 1/2	3/8	5 3/4	7 1/4	7 1/8	9	6	19 1/4		9 3/4	1 5/8	9.0
4	48		2 1/4	3/4	1	19 1/4	10 3/4	17 3/8	7/8	30	2 1/4	4	1 1/4	15	10	1 5/8	1/2	8	9 1/4	9 3/8	12	8	25 5/8		13	2	16.0
5	48		2 1/4	3/4	1	19 1/4	10 3/4	17 3/8	7/8	30	2 1/4	4	1 1/4	15	10	1 5/8	1/2	8	9 1/4	9 3/8	12	8	25 5/8		13	2	16.0

STANDARD SIGN
W3-5

WISCONSIN DEPT OF TRANSPORTATION

APPROVED Matthew R Rauch
for State Traffic Engineer

DATE 5/3/11 PLATE NO. W3-5.4

PROJECT NO:

SHEET NO: 60 E

7

7

EARTHWORK - CTH C

STATION	AREA (SF) Cut	Salvaged Pavement Material	Fill	EBS	Incremental Vol (CY) (Unadjusted) Cut Note 1	Salvaged Pavement Material Note 2	Fill Note 3	EBS Note 4	Cumulative Vol (CY) Cut 1.00 Note 1	Expanded Fill 1.30	Expanded EBS Backfill 1.30 Note 5	Mass Ordinate Note 6
84+00.00	0	0	0	0								
84+50.00	0	0	34	0	0	0	32	0	0	41	0	-41
85+00.00	0	0	32	0	0	0	62	0	0	122	0	-122
85+50.00	0	0	30	0	0	0	58	0	0	197	0	-197
86+00.00	0	0	17	0	0	0	43	0	0	253	0	-253
86+50.00	0	0	12	0	0	0	27	0	0	288	0	-288
87+00.00	0	0	2	0	0	0	13	0	0	306	0	-306
87+50.00	0	0	2	0	0		4	0	0	311	0	-311
88+00.00	0	0	0	0	0		2	0	0	314	0	-314
			TOTALS		0	0	241	0				

EARTHWORK - CTH C

STATION	AREA (SF) Cut	Salvaged Pavement Material	Fill	EBS	Incremental Vol (CY) (Unadjusted) Cut Note 1	Salvaged Pavement Material Note 2	Fill Note 3	EBS Note 4	Cumulative Vol (CY) Cut 1.00 Note 1	Expanded Fill 1.30	Expanded EBS Backfill 1.30 Note 5	Mass Ordinate Note 6
114+50.00	0	0	0	0								
115+00.00	0	0	12	0	0	0	12	0	0	15	0	-15
115+50.00	0	0	16	0	0	0	27	0	0	49	0	-49
116+00.00	0	0	20	0	0	0	34	0	0	93	0	-93
116+50.00	0	0	26	0	0	0	42	0	0	149	0	-149
117+00.00	0	0	25	0	0	0	47	0	0	209	0	-209
117+50.00	0	0	17	0	0	0	38	0	0	259	0	-259
118+00.00	0	0	24	0	0	0	37	0	0	308	0	-308
118+50.00	0	0	37	0	0	0	56	0	0	380	0	-380
119+00.00	0	0	20	0	0	0	53	0	0	449	0	-449
119+50.00	0	0	8	0	0	0	26	0	0	483	0	-483
120+00.00	0	0	0	0	0		8	0	0	493	0	-493
			TOTALS		0	0	379	0				

1 - Cut	Cut includes Salvaged Pavement Material
2 - Salvaged Pavemnet Material	Pulverized Asphalt and Base
3 - Fill	Unexpanded - Does not include Salvaged Pavemnet Material Volume
4 - EBS	EBS to be wasted.
5 - Expanded EBS Backfill	Will be backfilled with Pit Run (Item # 313.0115)
6 - Mass Ordinate	Cut - (Fill * Fill Factor) - Salvaged Pavemnet Material
6 - Mass Ordinate	Mass Ordinate does not include EBS

EARTHWORK - CTH C

STATION	AREA (SF) Cut	Salvaged Pavement Material	Fill	EBS	Incremental Vol (CY) (Unadjusted) Cut Note 1	Salvaged Pavement Material Note 2	Fill Note 3	EBS Note 4	Cumulative Vol (CY) Cut 1.00 Note 1	Expanded Fill 1.30	Expanded EBS Backfill 1.30 Note 5	Mass Ordinate Note 6
244+50.00	13	13	0	0								
245+00.00	24	24	16	104	35	35	15	97	35	20	125	-20
245+50.00	20	20	18	117	41	41	32	205	75	61	392	-61
246+00.00	20	20	17	116	37	37	32	215	112	103	671	-103
246+50.00	16	16	23	79	33	33	38	181	145	152	906	-152
247+00.00	14	14	46	64	28	28	64	132	173	236	1,079	-236
247+50.00	15	15	71	57	27	27	108	111	200	376	1,223	-376
248+00.00	16	16	104	51	28	28	162	99	228	587	1,352	-587
248+50.00	30	30	161	125	43	43	246	163	271	906	1,564	-906
249+00.00	16	16	145	57	43	43	283	169	314	1,274	1,783	-1,274
249+50.00	15	15	131	114	29	29	255	158	343	1,606	1,989	-1,606
250+00.00	14	14	92	117	27	27	206	214	370	1,875	2,267	-1,875
250+50.00	14	14	38	141	26	26	121	239	397	2,031	2,577	-2,031
251+00.00	18	18	9	0	30	30	44	131	427	2,088	2,747	-2,088
251+50.00	16	16	0	0	32	32	9	0	458	2,099	2,747	-2,099
			TOTALS		458	458	1,615	2,113				

EARTHWORK - LINSE ROAD

STATION	AREA (SF) Cut	Salvaged Pavement Material	Fill	EBS	Incremental Vol (CY) (Unadjusted) Cut Note 1	Salvaged Pavement Material Note 2	Fill Note 3	EBS Note 4	Cumulative Vol (CY) Cut 1.00 Note 1	Expanded Fill 1.30	Expanded EBS Backfill 1.30 Note 5	Mass Ordinate Note 6
300+50.00	0	0	91	59								
301+00.00	0	0	28	53	0	0	111	104	0	144	135	-144
301+50.00	35	0	0	0	33	0	26	49	33	178	199	-145
302+00.00	18	0	0	0	49		0	0	82	178	199	-96
			TOTALS		82	0	137	153				

1 - Cut	Cut includes Salvaged Pavement Material
2 - Salvaged Pavemnet Material	Pulverized Asphalt and Base
3 - Fill	Unexpanded - Does not include Salvaged Pavemnet Material Volume
4 - EBS	EBS to be wasted.
5 - Expanded EBS Backfill	Will be backfilled with Pit Run (Item # 313.0115)
6 - Mass Ordinate	Cut - (Fill * Fill Factor) - Salvaged Pavemnet Material
6 - Mass Ordinate	Mass Ordinate does not include EBS

NOTE:
OFFSET DISTANCES SHOWN ARE TO CTH C CONSTRUCTION ℞

EXISTING RIGHT OF WAY LOCATED 100' LEFT AND RIGHT OF CTH C EXISTING ROADWAY CENTERLINE

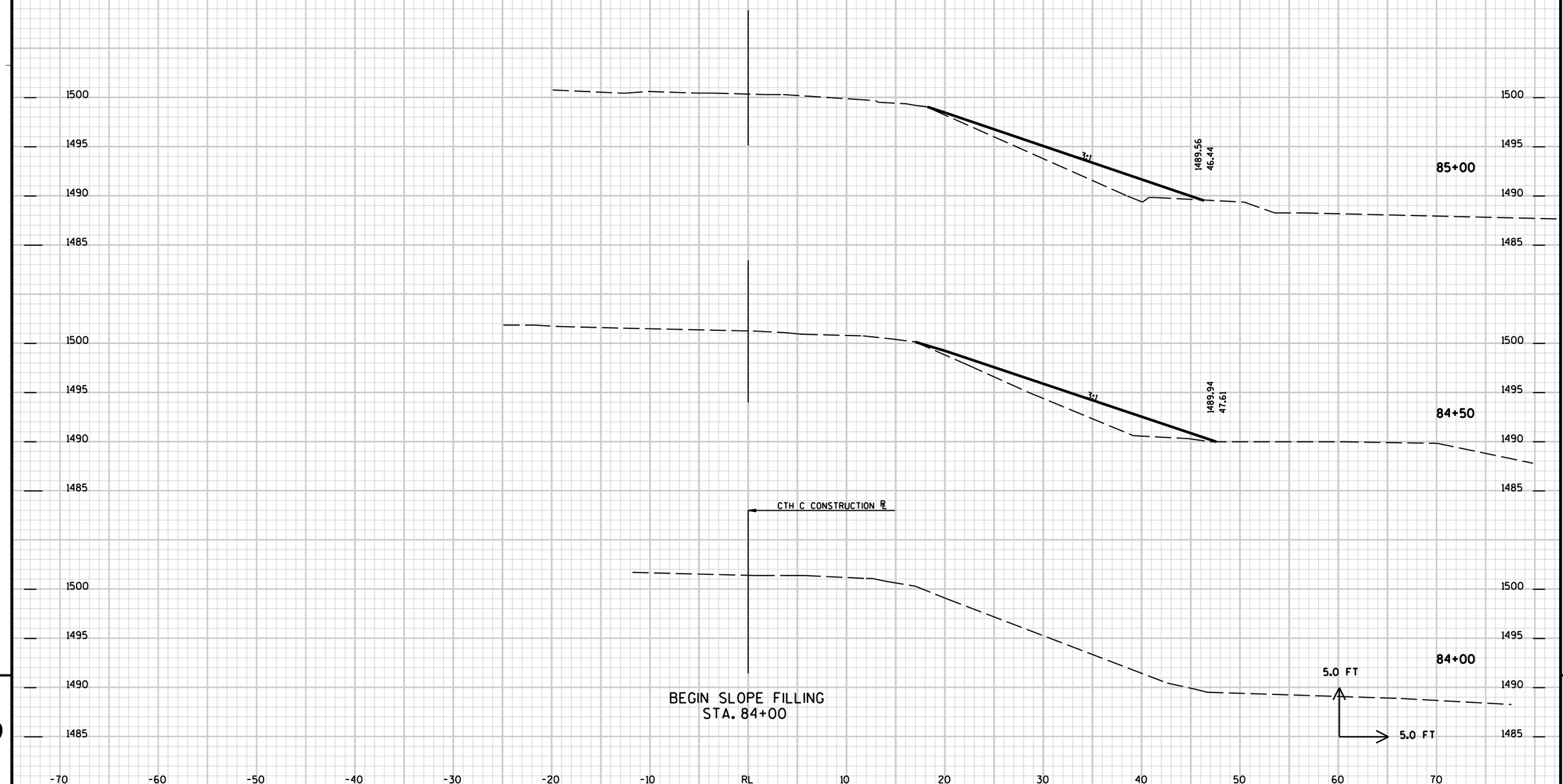

9

9

PROJECT NO: 9330-00-70	HWY: CTH C	COUNTY: FOREST	CROSS SECTIONS	SHEET	E

NOTE:
OFFSET DISTANCES SHOWN ARE TO CTH C CONSTRUCTION ℞

EXISTING RIGHT OF WAY LOCATED 100' LEFT AND RIGHT OF CTH C EXISTING ROADWAY CENTERLINE

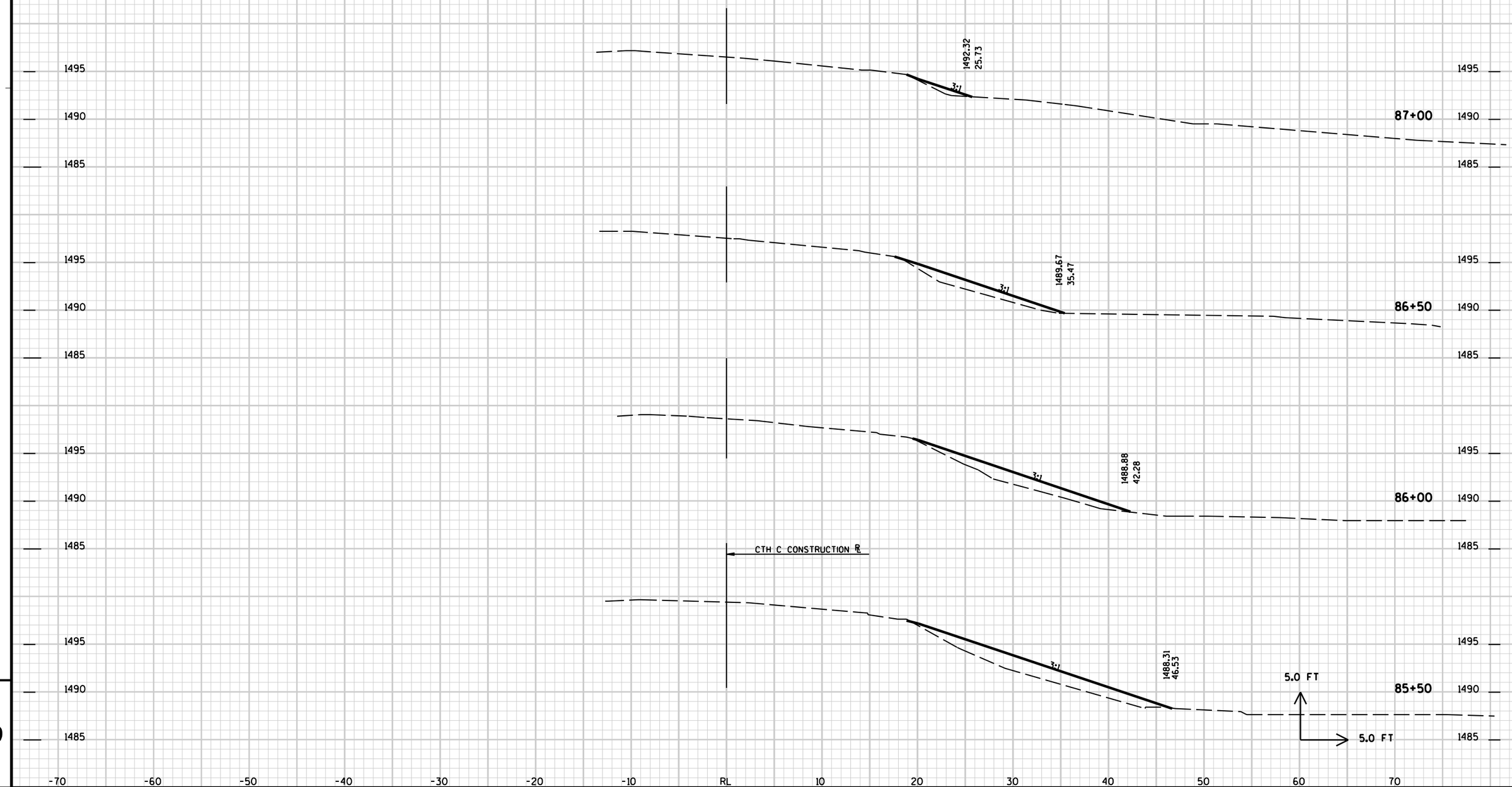

9

9

PROJECT NO: 9330-00-70	HWY: CTH C	COUNTY: FOREST	CROSS SECTIONS	SHEET	E

NOTE:
OFFSET DISTANCES SHOWN ARE TO CTH C CONSTRUCTION ℞

EXISTING RIGHT OF WAY LOCATED 100' LEFT AND RIGHT OF CTH C EXISTING ROADWAY CENTERLINE

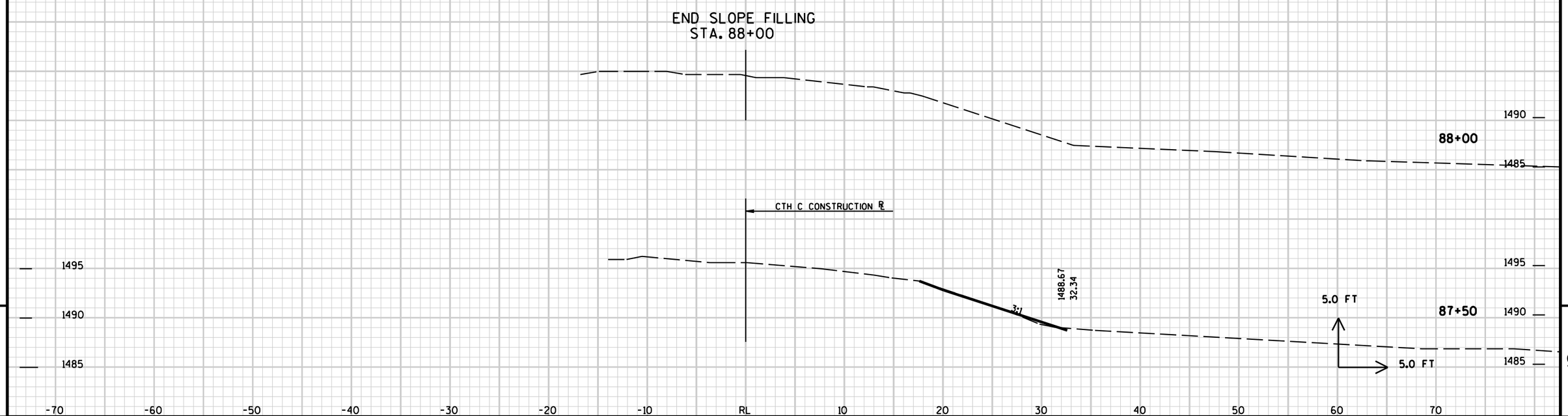

9

9

PROJECT NO: 9330-00-70	HWY: CTH C	COUNTY: FOREST	CROSS SECTIONS	SHEET	E

NOTE:
OFFSET DISTANCES SHOWN ARE TO CTH C CONSTRUCTION ℞

EXISTING RIGHT OF WAY LOCATED 100' LEFT AND RIGHT OF CTH C EXISTING ROADWAY CENTERLINE

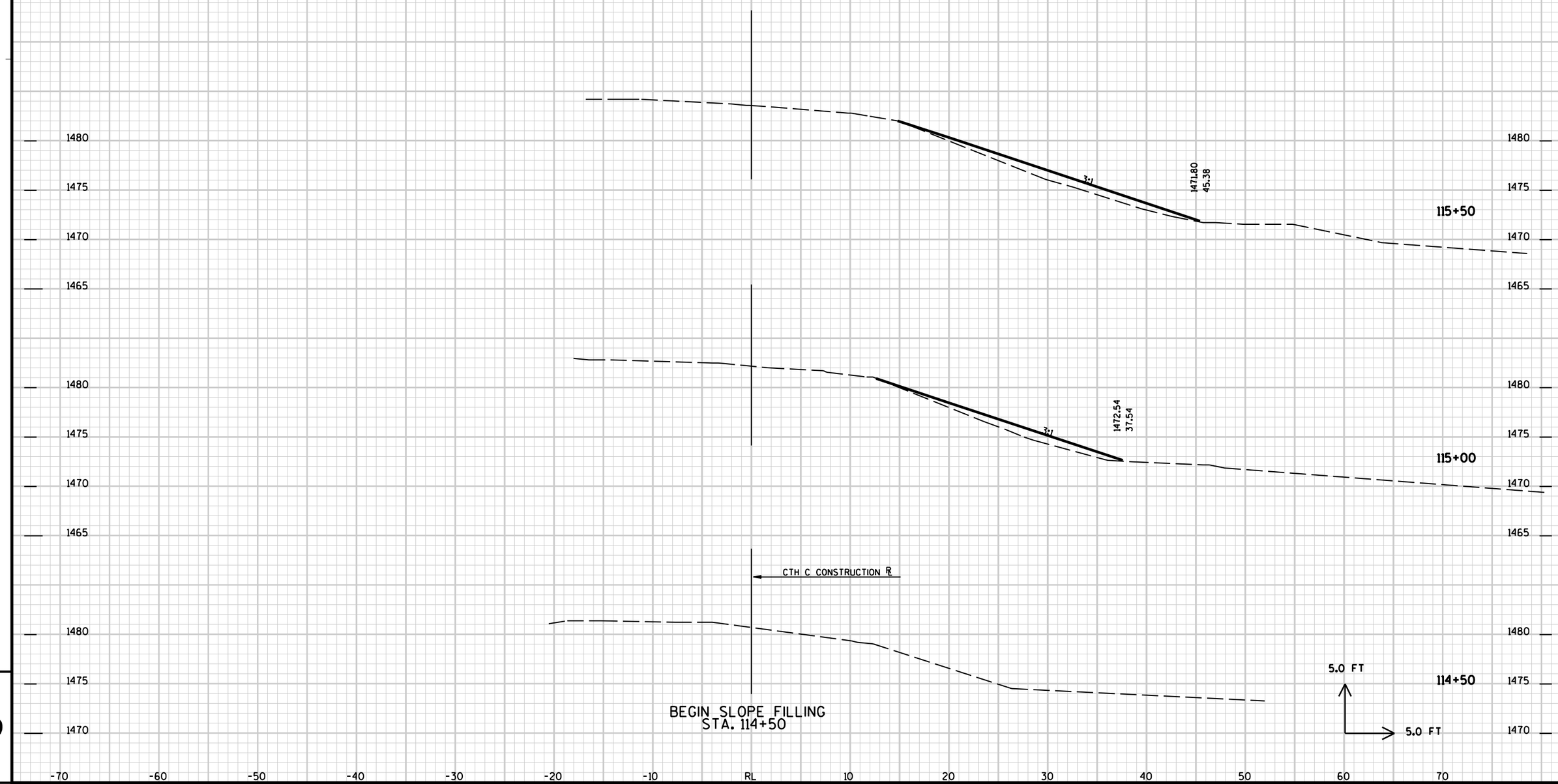

9

PROJECT NO: 9330-00-70	HWY: CTH C	COUNTY: FOREST	CROSS SECTIONS	SHEET	E

NOTE:
OFFSET DISTANCES SHOWN ARE TO CTH C CONSTRUCTION ℞

EXISTING RIGHT OF WAY LOCATED 100'LEFT AND RIGHT OF CTH C EXISTING ROADWAY CENTERLINE

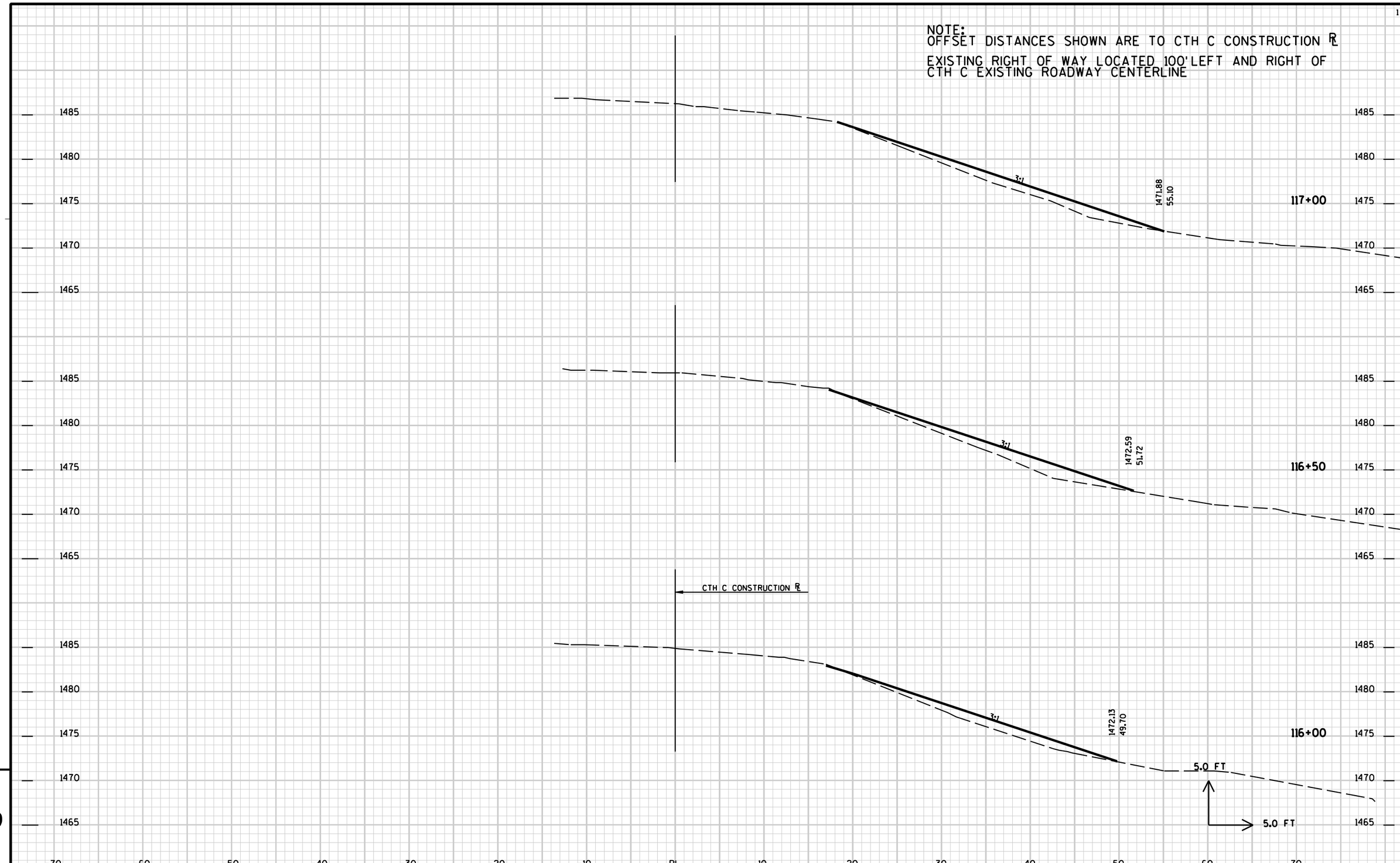

PROJECT NO: 9330-00-70	HWY: CTH C	COUNTY: FOREST	CROSS SECTIONS	SHEET 67	E

NOTE:
OFFSET DISTANCES SHOWN ARE TO CTH C CONSTRUCTION ℞
EXISTING RIGHT OF WAY LOCATED 100' LEFT AND RIGHT OF CTH C EXISTING ROADWAY CENTERLINE

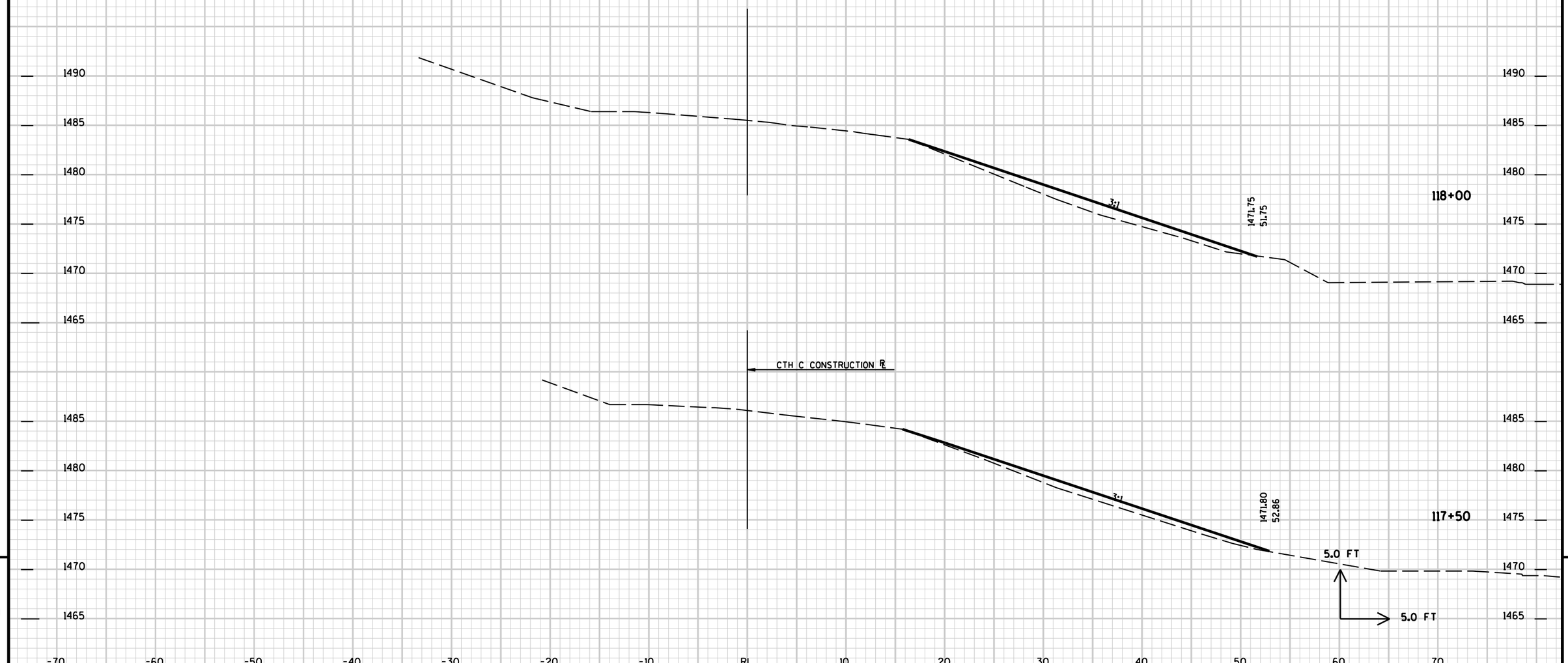

9

9

PROJECT NO: 9330-00-70	HWY: CTH C	COUNTY: FOREST	CROSS SECTIONS	SHEET 68	E

NOTE:
OFFSET DISTANCES SHOWN ARE TO CTH C CONSTRUCTION ℞
EXISTING RIGHT OF WAY LOCATED 100' LEFT AND RIGHT OF CTH C EXISTING ROADWAY CENTERLINE

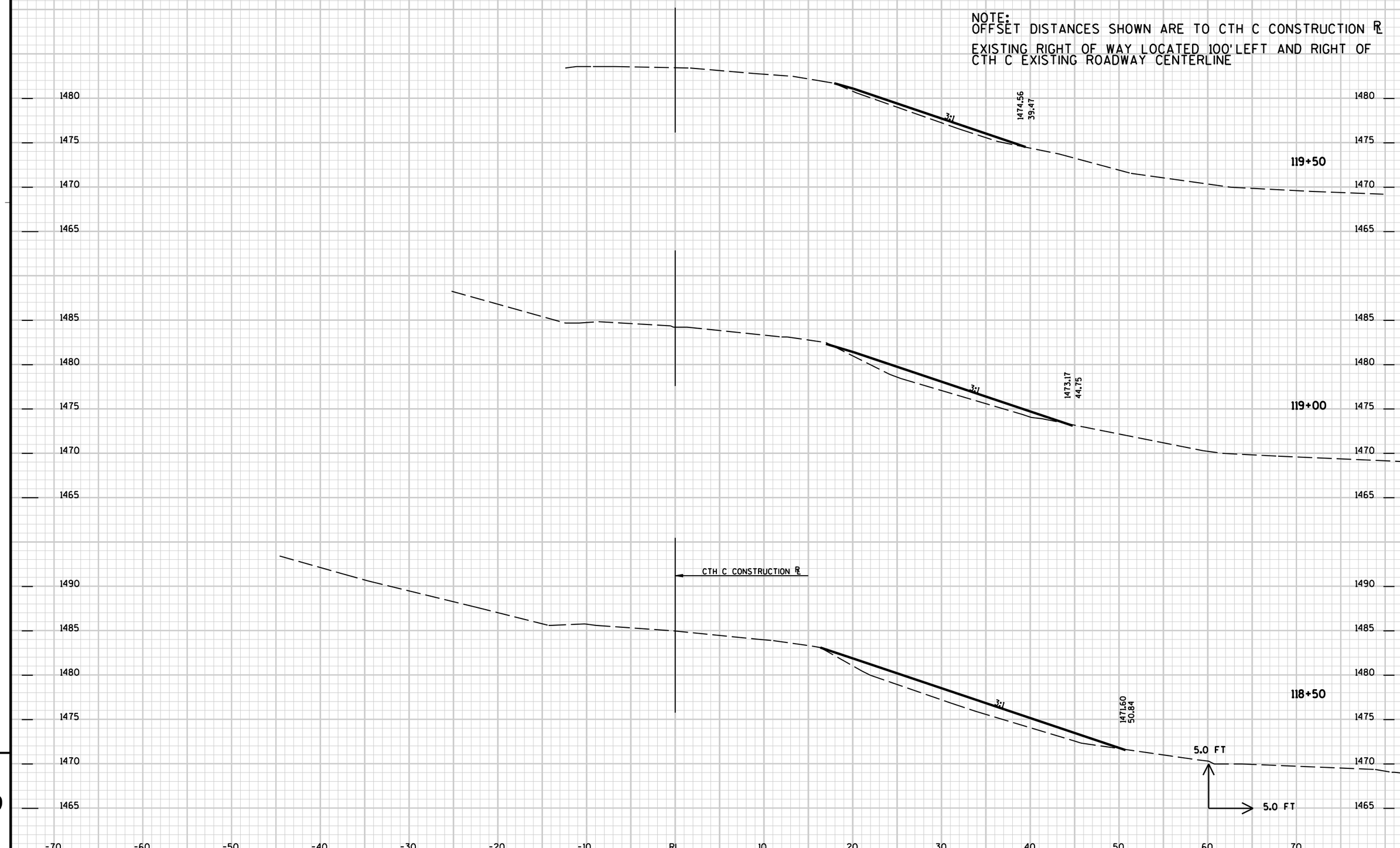

9

9

PROJECT NO: 9330-00-70	HWY: CTH C	COUNTY: FOREST	CROSS SECTIONS	SHEET	E

NOTE:
OFFSET DISTANCES SHOWN ARE TO CTH C CONSTRUCTION ℞

EXISTING RIGHT OF WAY LOCATED 100' LEFT AND RIGHT OF CTH C EXISTING ROADWAY CENTERLINE

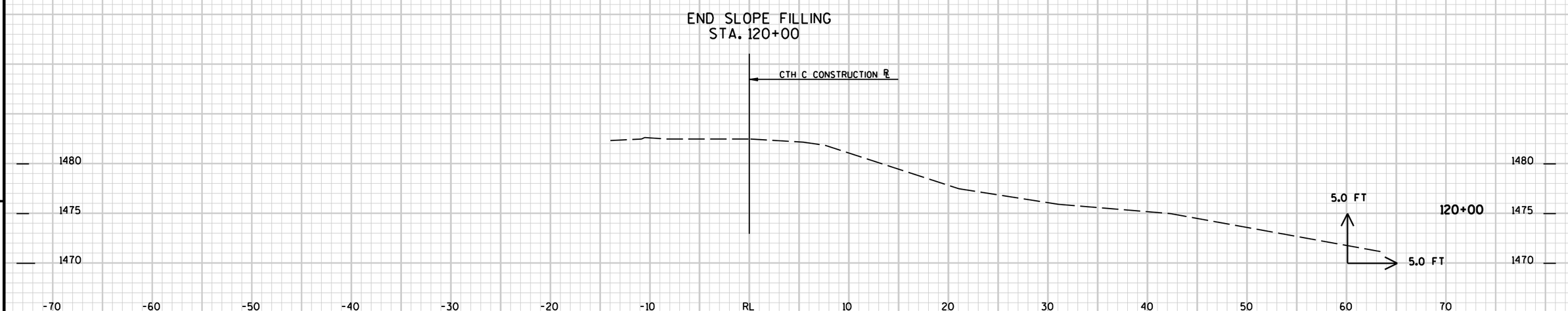

9

9

PROJECT NO: 9330-00-70	HWY: CTH C	COUNTY: FOREST	CROSS SECTIONS	SHEET 70	E

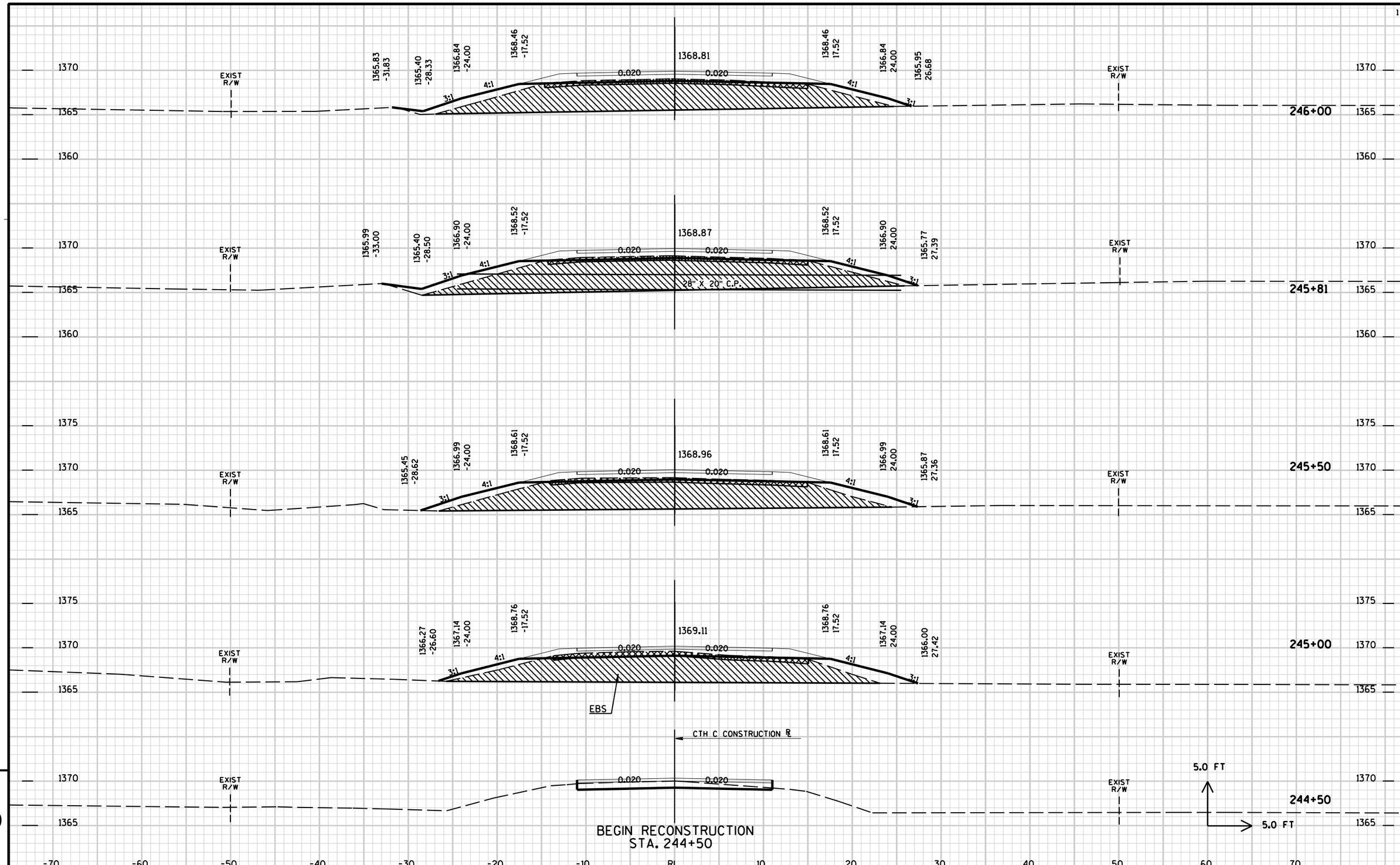

PROJECT NO: 9330-00-70	HWY: CTH C	COUNTY: FOREST	CROSS SECTIONS	SHEET 71	E

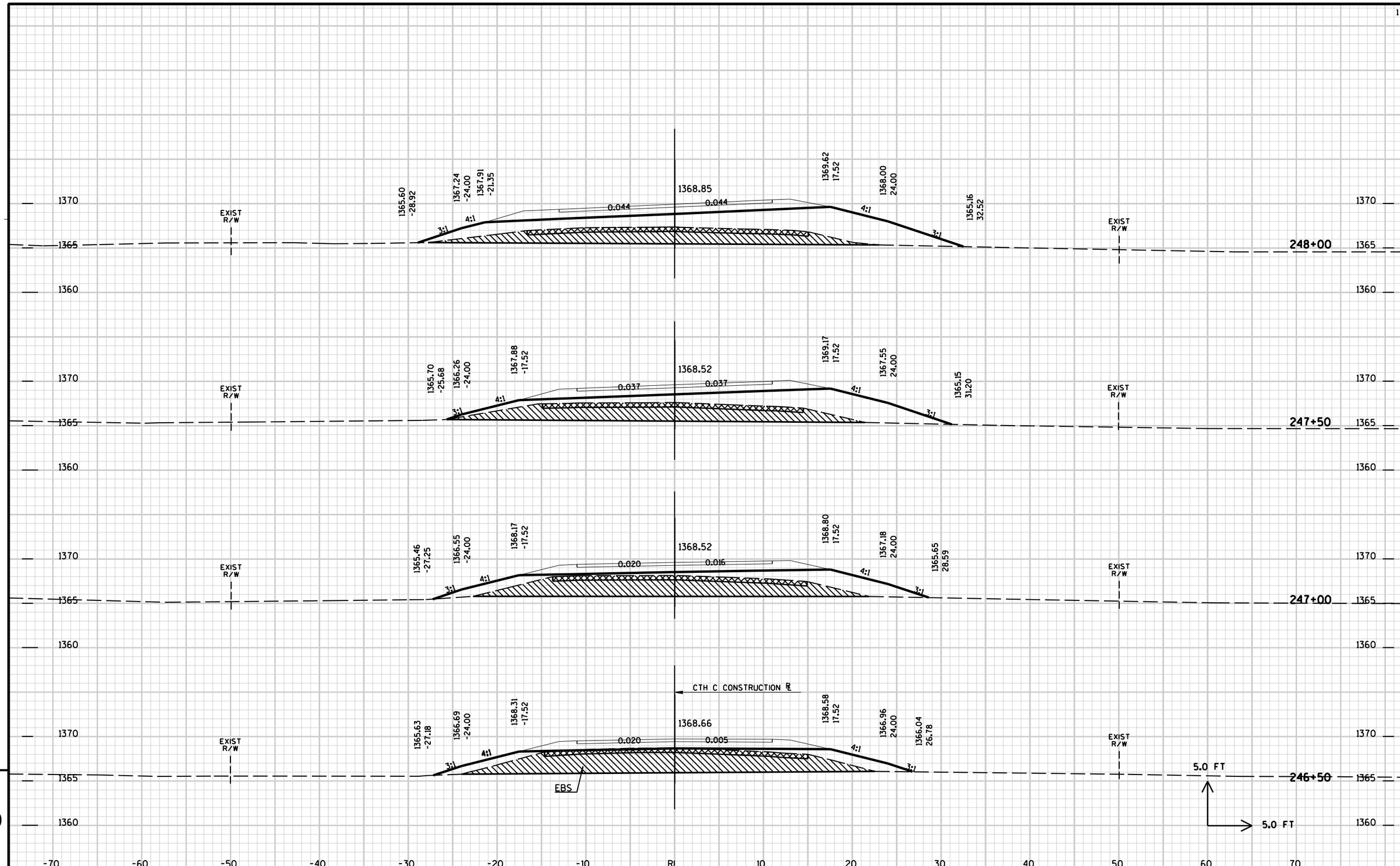

PROJECT NO: 9330-00-70	HWY: CTH C	COUNTY: FOREST	CROSS SECTIONS	SHEET 72	E

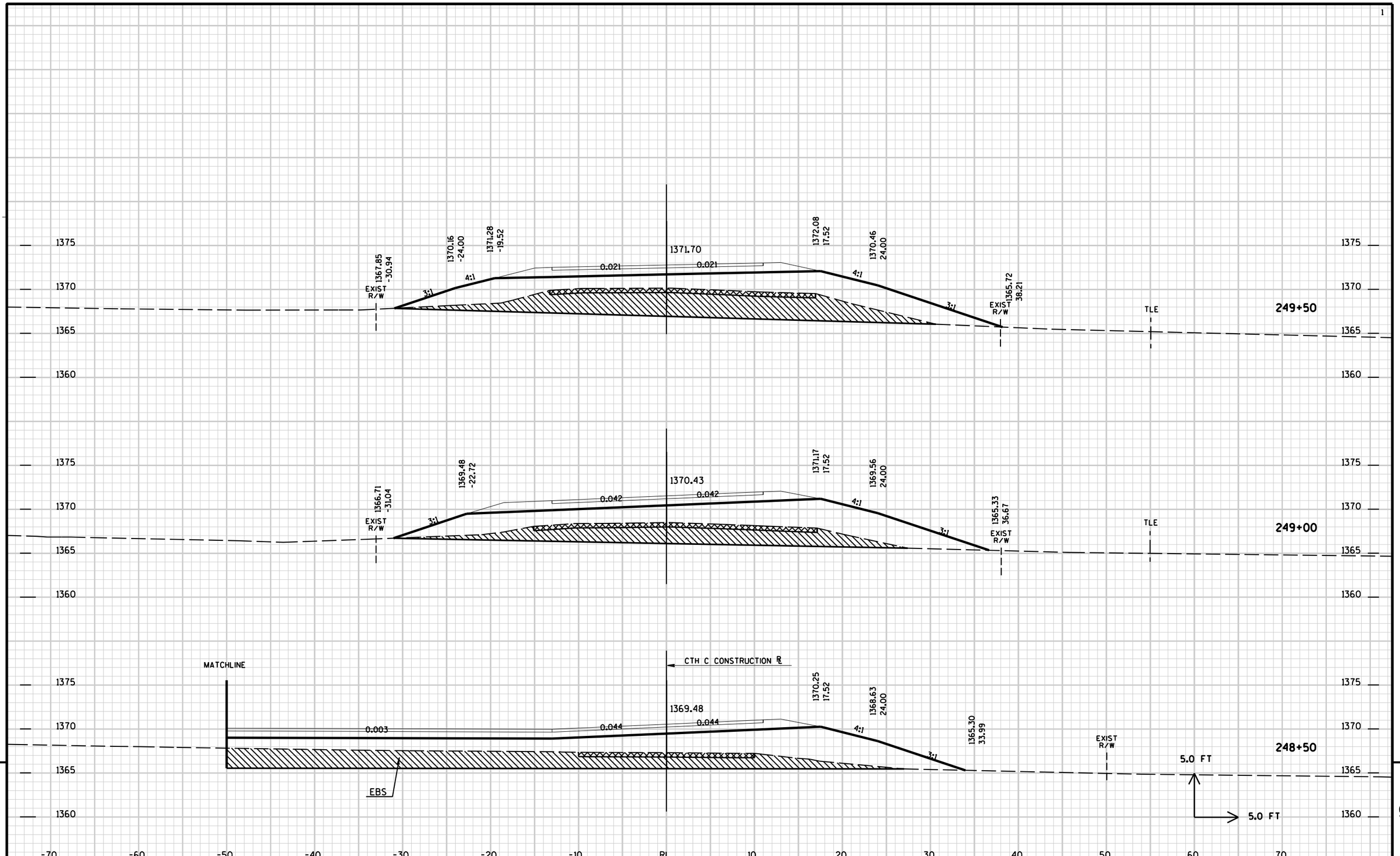

PROJECT NO: 9330-00-70	HWY: CTH C	COUNTY: FOREST	CROSS SECTIONS	SHEET 73	E

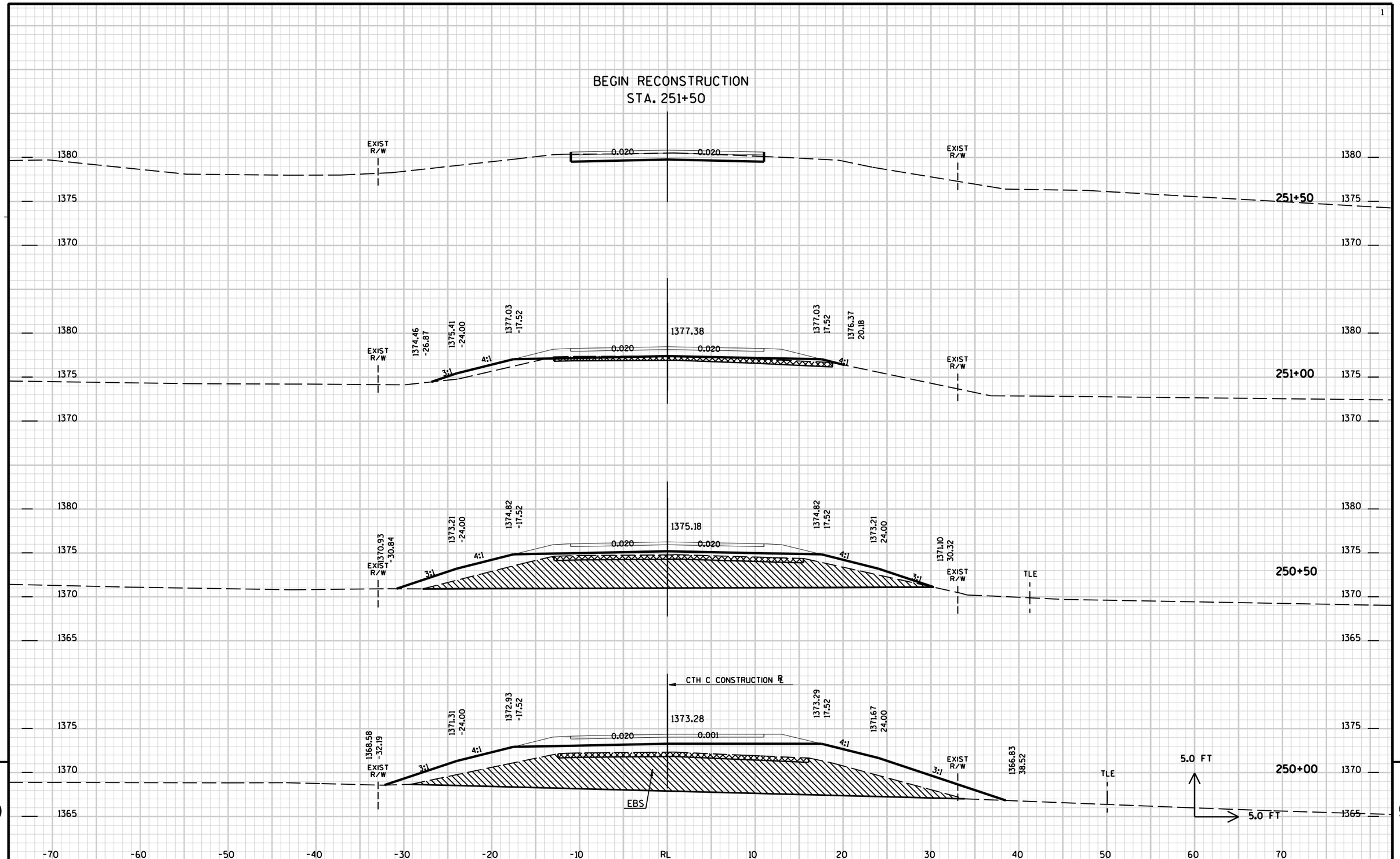

PROJECT NO: 9330-00-70	HWY: CTH C	COUNTY: FOREST	CROSS SECTIONS	SHEET 74	E

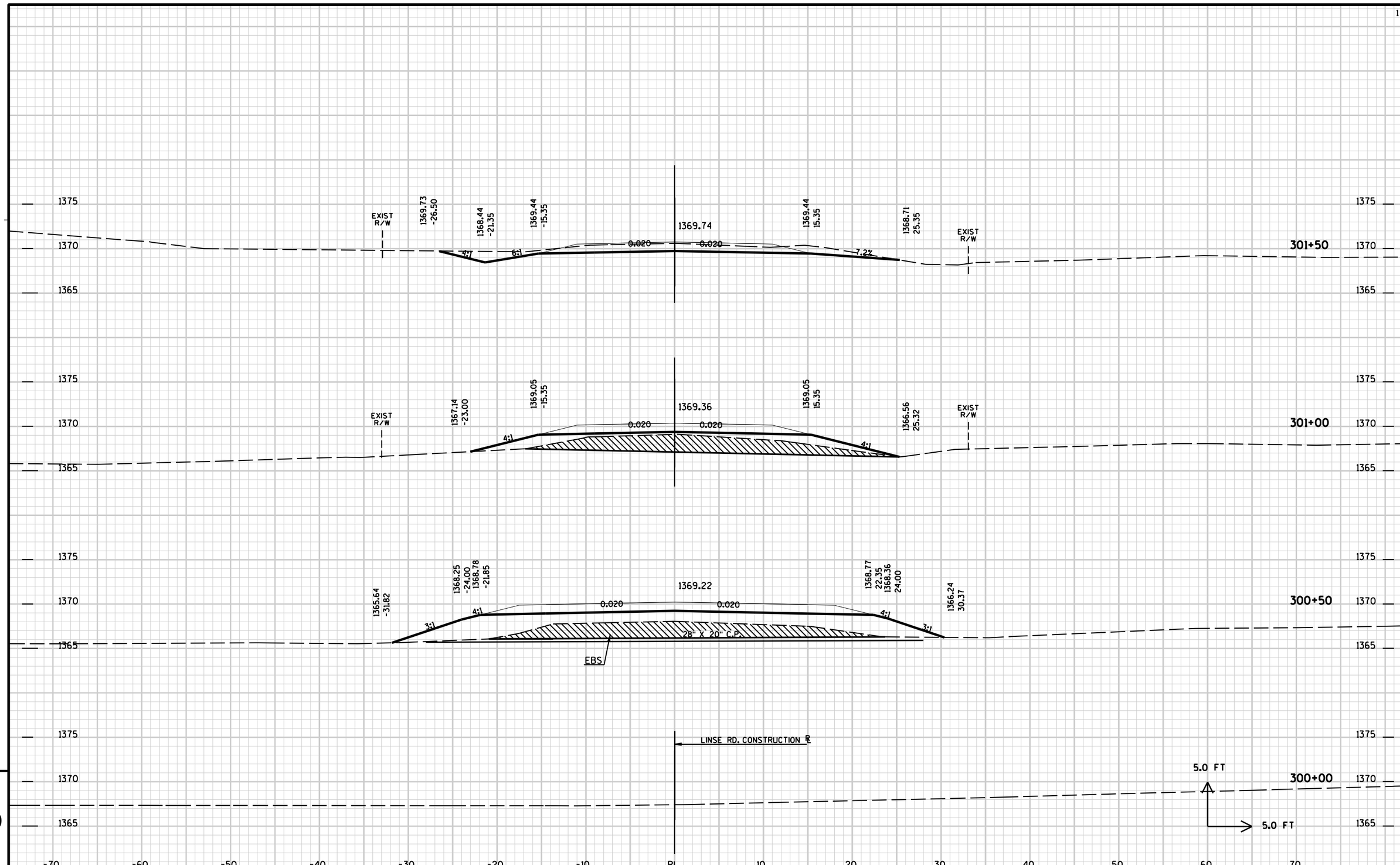

PROJECT NO: 9330-00-70	HWY: CTH C	COUNTY: FOREST	CROSS SECTIONS - LINSE ROAD	SHEET 75	E

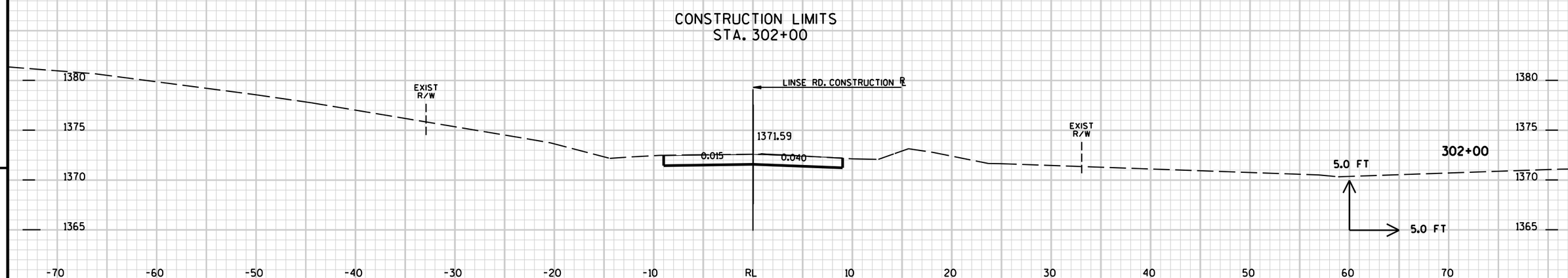

9

9

PROJECT NO: 9330-00-70	HWY: CTH C	COUNTY: FOREST	CROSS SECTIONS - LINSE ROAD	SHEET	E

Notes

Wisconsin Department of Transportation

Dedicated people creating transportation solutions through innovation and exceptional service.

http://www.dot.wisconsin.gov